NJCAT TECHNOLOGY VERIFICATION

Up-Flo® Filter 450R

(Ribbon Membrane)

Hydro International

June 2018

TABLE OF CONTENTS

List of Figures

Page

List of Tables

Page

1. Description of Technology

The Up-Flo® Filter is a stormwater treatment device that incorporates gravitational separation of floating and settling materials, and filtration of polluted stormwater to offer treatment train capabilities in a standalone device. Each Up-Flo® Filter consists of a highly configurable array of modules containing engineered filtration media that can be employed as an upward flow media bed filter or as an upward flow membrane filter that utilizes filter ribbons as the media type **(Figure 1)**. The tested Up-Flo Filter® with Filter Ribbon 450R is a membrane media type that includes a flow distribution media insert. Testing and results in this report differ from the December 2016 NJCAT verification report for Up-Flo® Filter with Ribbon 285R given the length of Ribbon was extended from 28.5 inches to 45.0 inches.

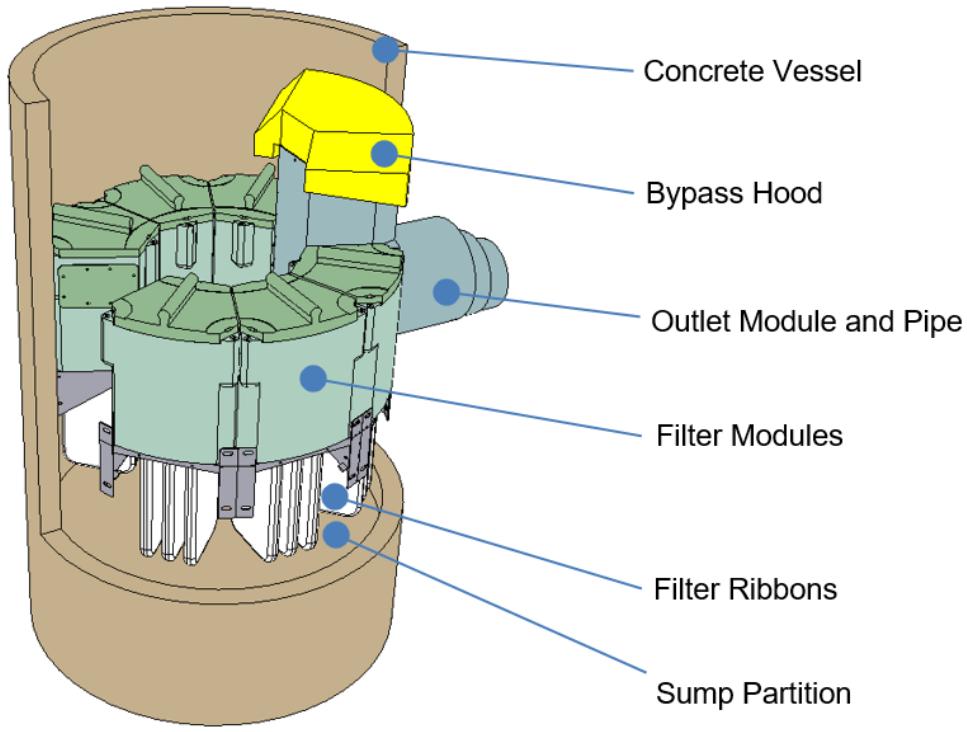

Figure 1 Up-Flo® Filter Configured with Filter Ribbons

Operation of the Up-Flo® Filter is initiated during a rainfall event when stormwater is conveyed into the chamber from a pipe or grated inlet. As flow enters the chamber, internal components prevent pollutants from escaping by settling particulate matter into the sump, trapping floating debris that rises to the surface and non-settleable pollutants on and within the filter ribbons.

Depending on the runoff rate entering the chamber, a water column builds within the concrete vessel until it reaches a bypass weir elevation. This water column provides the potential energy to drive flow upward through the engineered media **(Figure 2)**. Filtered water exits the Filter Module(s) into the Outlet Module via a conveyance channel located above the filter ribbons. Flow

in excess of the design filtration capacity discharges over a bypass weir located inside the manhole or adjacent to the vault installation.

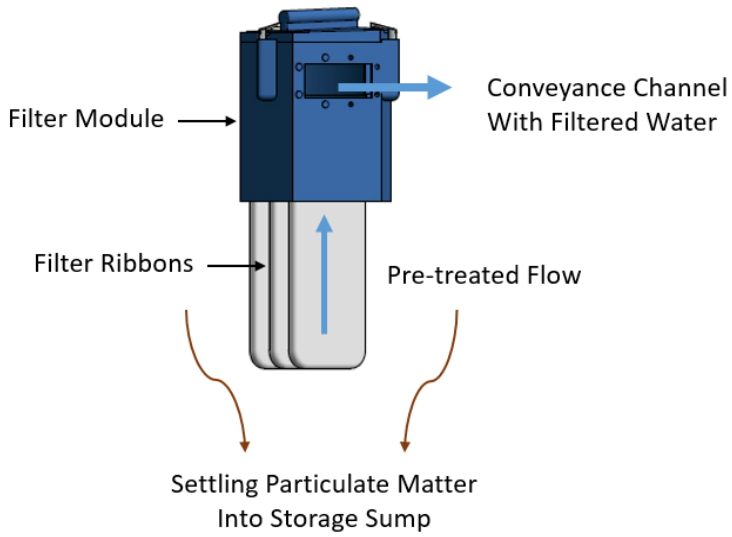

Figure 2 Up-Flo® Filter Module with Filter Ribbons

The Up-Flo® Filter can be retrofit into an existing storm-drain manhole or supplied as a complete system housed in a 4-ft diameter manhole or precast vault. Manhole configurations consist of a single ring assembly containing one to six Filter Modules. Vaulted systems may contain single or multiple filter bays each consisting of one to 25 Filter Modules. (**Figure 3**)

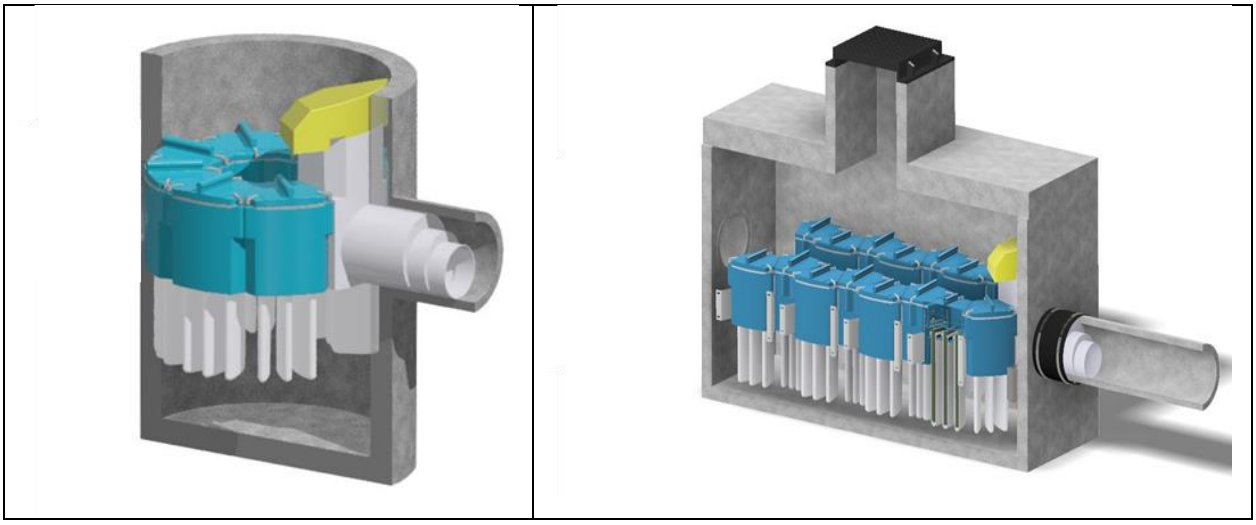

Figure 3 Up-Flo® Filter Rendering showing Manhole and Vaulted Configurations

2. Laboratory Testing

The New Jersey Department of Environmental Protection (NJDEP) maintains a list of certified stormwater manufactured treatment devices (MTDs) that can be installed on newly developed or redeveloped sites to achieve stormwater treatment requirements for Total Suspended Solids (TSS). Manufactured treatment devices are evaluated for certification according to the *New Jersey Department of Environmental Protection Process for Approval of Use for Manufactured Treatment Devices (January, 2013*) (heretofore referred to as "NJDEP Approval Process"). The NJDEP Approval Process requires that TSS treatment devices operating on filtration principles be tested according to the *New Jersey Department of Environmental Protection Laboratory Protocol to Assess Total Suspended Solids Removal by a Filtration Manufactured Treatment Device* (heretofore referred to as "NJDEP Protocol"). In addition, the NJDEP Approval Process requires submittal of a Quality Assurance Project Plan (QAPP) to the New Jersey Corporation for Advanced Technology (NJCAT) for review and approval prior to testing to insure that all laboratory procedures will be conducted in strict accordance with the NJDEP Protocol. The QAPP was submitted and approved by NJCAT in October 2017 prior to commencement of testing.

Testing was conducted in December 2017 and January 2018 by Hydro International at the company's full-scale hydraulic testing facility in Portland, Maine. Since testing was carried out in-house, Hydro International contracted with FB Environmental to provide third party oversight. FB Environmental representatives were present during all testing procedures. The test program was conducted in accordance with the NJDEP Protocol in two phases: removal efficiency testing and sediment mass loading capacity testing.

2.1 Test Setup

A schematic drawing of the laboratory setup is shown in **Figure 4** and key dimensions of the Filter Test Tank are shown in **Figure 5**. Operating as a recirculating closed loop system, water from a 2,000-gallon Supply Tank is used to fill a secondary supply tank that maintains a constant head throughout each test run. The Constant Head Tank discharges flow to the filter test tank and then flows from a 200-gallon overflow tank back to the Supply Tank. Opening a butterfly valve near the bottom of the Constant Head Tank will allow water to flow through a flow meter, which is connected to a 1-1/2 inch diameter inlet pipe. The inlet pipe is sized to allow for gravity flow into the Filter Test Tank and includes a background sample port and slurry feed port, which is located 7-inches from the Filter Test Tank (Refer to Section 2.3 for more details about the slurry feed). The outlet of the Filter Test Tank is fitted with a slopping tray, constructed from a 12" PVC pipe cut in half, that directs the free-falling discharge directly into a 200-gallon Overflow Tank. Once the water elevation in the Overflow Tank reaches a predetermined level, the treated water is pumped through a fine filtration system that reduces background concentrations before returning to the Supply Tank. A control loop with a heater and heater pump maintain the water temperature in the supply tank.

Background samples were taken with 1-liter wide mouth bottles at the background sample port located 19-in. upstream of the Up-Flo Filter Test Tank. The port was operated with a 1-in. ball valve. Before a sample was taken, the line was flushed to ensure influent background samples were

representative. Influent background samples were taken in correspondence with the odd numbered effluent samples (first, third, and fifth). The time each background and effluent sample was collected was recorded so that samples could be time stamped. The background data was plotted on a curve for use in adjusting the effluent samples for background concentration.

Water temperature was measured in the Constant Head Tank with a thermocouple connected to the data acquisition unit. This is a representative location to measure water temperature because all test water must pass through this tank immediately before passing through the rest of the test setup. Maximum temperature remained below 80° F for the duration of the test. Temperature was recorded every 60 seconds or less. Thermocouple calibration was confirmed by the independent observer prior to testing.

A data acquisition unit, the DATAQ DI-245, is connected to a computer system running WINDAQ software. The flow meter, Dwyer pressure transducer and thermocouple are connected to the DATAQ unit. Test data is recorded throughout the test, saved and submitted with the test report.

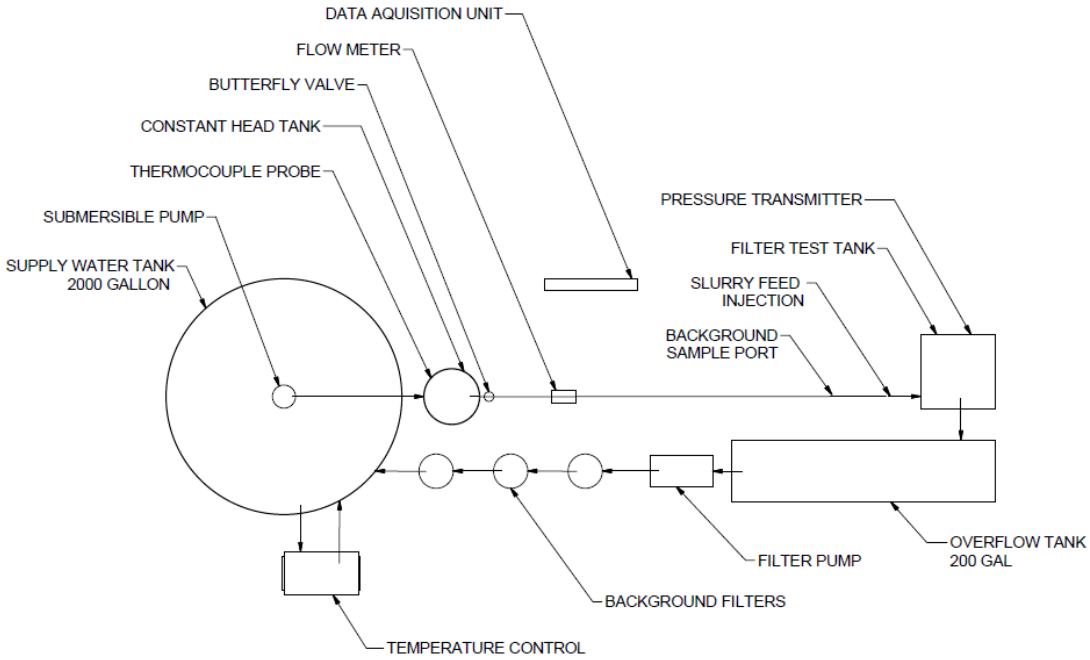

Figure 4 Laboratory Testing Arrangement Diagram

Test Unit Description

The Filter Test Tank (**Figure 5**) included one full-scale commercially available Up-Flo Filter Module fitted with three 45-inch Filter Ribbons as shown in **Figure 2**. The Filter Module was connected directly to the Test Rig since the Outlet Module/Chute was not required. The Outlet Module is, however, shown in **Figure 5** to illustrate the key dimensions relative to the Filter Test Tank and what is commercially supplied. The area of the Filter Test Tank was 2.08 ft^2 and the

Conveyance Channel Invert was 46.5-inches from the sump floor. When supplied with an Outlet Module, the Conveyance Channel Invert will be 47.5 inches to allow for a 36-inch sump and 18.5 inches of Driving Head, which is equivalent to 30 inches of Operating Head. The difference of 11.5 inches, is the height within each module needed to connect the Ribbons and allow treated flow to pass through the Conveyance Channel. The static water elevation or draindown depth is controlled by the Conveyance Channel invert elevation. To prevent a submerged inlet pipe, the inlet and outlet inverts require an 11.5-inch drop. The Bypass elevation is set by the top of the Outlet Chute, which is 66 inches above the Filter Test Tank floor. The Filter Ribbons were suspended 1 inch above the floor of the Filter Test Tank.

The Filter Module's conveyance channel was mounted to the side of the Filter Test Tank at the filtrate discharge port. The connection of the Filter Module to the Filter Test Tank uses the same gasket and hardware kit supplied with commercially available Up-Flo Filter systems. Unfiltered flow travels from underneath, around and through the Filter Ribbons into the conveyance channel within the Filter Module. Filtered flow is then discharged directly out of the Filter Test Tank into the 200-gallon Overflow Tank.

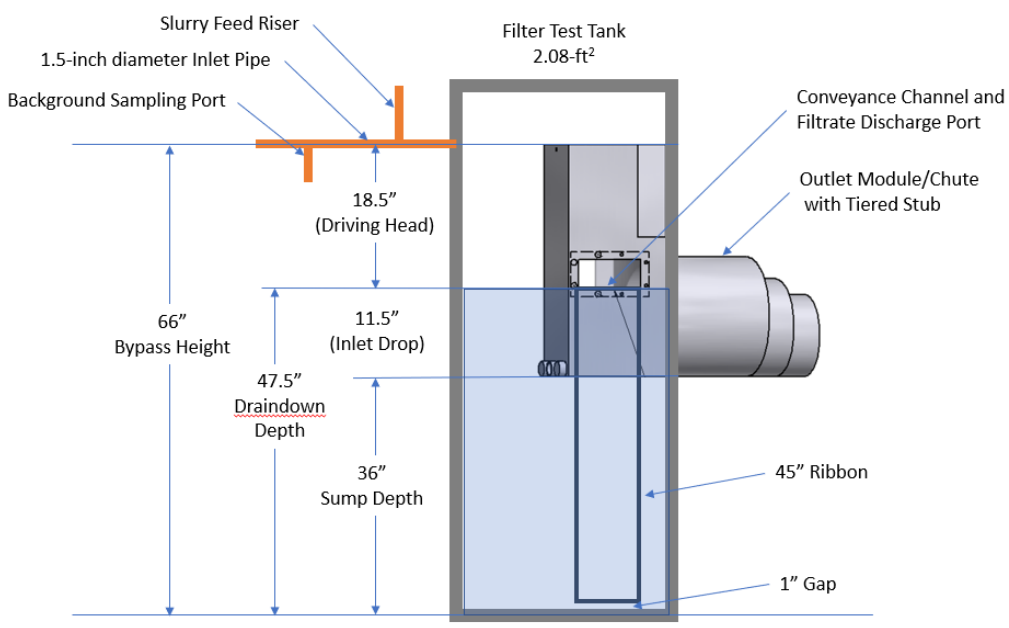

Figure 5 Key Dimensions of Test Rig with Outlet Module/Chute

The water elevation in the Filter Test Tank is dependent on the flow rate, which is controlled by the butterfly valve positioned after the Constant Head Tank. Head measurements are determined by measuring the height of water in the Filter Test Tank relative to the conveyance channel invert, not the sump floor. There is no driving head and therefore no flow, when the water elevation in the Filter Test Tank is the same height as the conveyance channel invert. Filtration only occurs when water in the Filtration Test Tank rises above the conveyance channel invert. Given the Outlet Module is a 30-inch chute with height that determines when bypass occurs, the 18.5-inch height

from the invert of the conveyance channel to top of the chute is referred to as the "maximum driving head". (See Section 4.3 for additional discussion).

2.2 Test Sediment

The test sediment was a blend of commercially available silica sand grades supplied by AGSCO Corporation and US Silica Company. The sediment was blended by Hydro International. The particle size distribution was independently verified by GeoTesting Express certifying that the supplied silica meets the specification within tolerance as described in Section 5B of the protocol. Results of particle size gradation testing are shown in **Table 1** and **Figure 6** below.

Table 1 Particle Size Distribution Results of Test Sediment Samples

Particle Size (µm)	% Finer					Difference from Protocol
	Protocol	Sample 1	Sample 2	Sample 3	Test Sediment Average	
1000	100	99.0	100.0	100.0	99.7	0.3%
500	95	96.0	96.0	96.0	96.0	-1.0%
250	90	90.0	89.0	89.0	89.3	0.7%
150	75	80.0	80.0	80.0	80.0	-5.0%
100	60	64.0	65.3	65.3	64.9	-4.9%
75	50	56.0	58.0	58.0	57.3	-7.3%
50	45	48.6	49.6	49.4	49.2	-4.2%
20	35	39.0	39.2	38.6	38.9	-3.9%
8	20	25.2	25.2	26.6	25.7	-5.7%
5	10	18.9	18.9	17.1	18.3	-8.3%
2	5	6.0	6.0	5.7	5.9	-0.9%

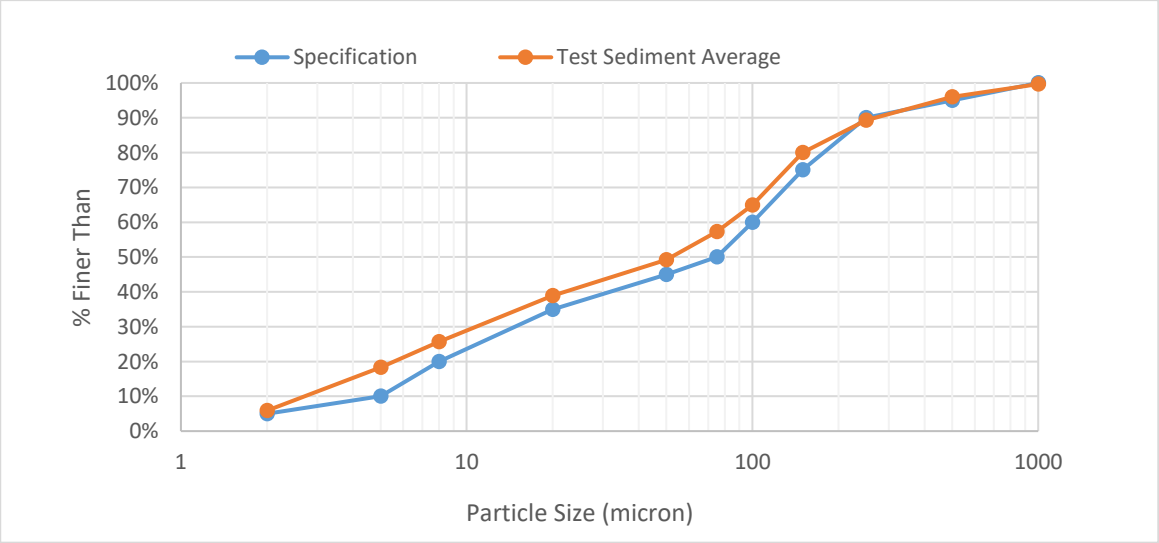

Figure 6 Average PSD of Test Sediment Compared to Protocol Specification

2.3 Sediment Removal Efficiency Testing

The Up-Flo® Filter performance was determined by testing its sediment removal efficiency. In accordance with the NJDEP filtration protocol Section 5, this was tested in the laboratory by seeding the system with a known test sediment gradation and determining what proportion of the material is retained within the filtration device. The removal efficiency testing occurred by repeatedly testing the unit at the maximum treatment flow rate (MTFR) until the design operating head was reached, which was determined from the sediment mass loading capacity testing.

Background samples were taken at the background sample port located upstream of the Up-Flo® Filter test setup. Influent background samples were taken in correspondence with the odd numbered effluent samples (first, third, and fifth). The time each background and effluent sample was collected was recorded. The background data was used to adjust the effluent samples for background concentration.

The test sediment feed rate and total mass of test sediment introduced during each test run was a known quantity and was introduced at a rate within 10% of the targeted value of 200 mg/L influent concentration. Test sediment was injected as a slurry providing a consistent, calibrated concentration of solids. The sediment injection port was located on the crest of the inlet pipe and was 7 inches from the test tank. Given the inlet pipe diameter is 1.5 inches, the sediment injection port was located 4.7 pipe diameters away from the Filter Tank.

Three sediment feed calibration samples were taken from the injection point at the start, middle and just prior to the conclusion of dosing during each test. Samples were taken by removing the slurry feed tube from the injection port and placing it into a bottle. Each sample was collected in a clean 1-liter container over an interval timed to the nearest second. The sample slurry was evaporated, and the sediment was weighed to the nearest milligram at Hydro International with the independent observer. The dried sediment was checked for moisture by removing the tray from the oven and weighing two times 30 minutes apart. No change in mass ensured that all the moisture had evaporated from the sample. The concentration coefficient of variance (COV) was not to exceed 0.10.

A G2 turbine flow meter was located between the Filter Test Tank and Constant Head Tank, 47-inches from the latter. Flow rates were recorded at a minimum once per minute. Mean flow rate was within 10% of the target flow rate and the COV was less than 0.03. The flow meter calibration was confirmed by the independent observer using the “time to fill” method prior to testing.

Water level in the Filter Test Tank was measured with a Dwyer pressure transducer located in the bottom of the tank. The water level was recorded every 10 seconds and included startup and drain down. The Dwyer pressure transducer calibration was confirmed by the independent observer prior to testing.

Once a constant feed of test sediment and flow rate was established, the first effluent sample was collected after a minimum of three MTD detention times had passed. The effluent samples were collected from the Filter Module discharge port and time stamped in 1-liter bottles using the grab sample method as described in Section 5G of the Protocol.

The time interval between sequential samples was evenly spaced during the test sediment feed period to achieve six effluent samples (compared to the required minimum of five). However, when the test sediment feed was interrupted for measurement, the next effluent sample collected was following a minimum of three MTD detention times. An example sampling schedule is given in **Table 2**. The time interval between effluent samples is less than 15 minutes unless interrupted by a calibration sample. The drawdown volume was sampled at two equally spaced volumes as the head falls from the test run final driving head to the system's static water level.

Table 2 Example Sampling Time for TSS Removal Efficiency Testing

Sampling Schedule						
Elapsed Time Based on Water Elev.				Slurry Feed Sample	Effluent Sample	Background Sample
<53	53-57	57-61	61-65.5			
00:00.0	00:00.0	00:00.0	00:00.0	1		
20:47.8	22:21.2	23:54.7	25:39.8		1	1
21:17.8	22:51.2	24:24.7	26:09.8		2	
21:47.8	23:21.2	24:54.7	26:39.8		3	2
22:17.8	23:51.2	25:24.7	27:09.8	2		
43:05.6	46:12.5	49:19.3	52:49.5		4	
43:35.6	46:42.5	49:49.3	53:19.5		5	3
44:05.6	47:12.5	50:19.3	53:49.5		6	
44:35.6	47:42.5	50:49.3	54:19.5	3		
1/3 Drain Down					7	
2/3 Drain Down					8	

The driving head increases as the filter ribbons become occluded. Increases in driving head increase the volume of water in the Filter Test Tank which was accounted for by increasing the detention time. The sampling schedule has different sample times depending on the level in the Filter Test Tank. For water levels below 53-in. the detention time for 53-in. of water was used. For water levels between 53 and 57-in. the detention time for 57-in. of water was used and so on. Water level was based on the last head measurement taken during the previous test.

All effluent samples were analyzed for TSS in accordance with ASTM 3977-97 (re-approval 2007) "Standard Test Methods for Determining Sediment Concentrations in Water Samples." Samples were sealed by the independent observer and delivered to Maine Environmental Laboratory (NELAC Accredited and certified by the states of Maine and New Hampshire) for processing. Removal efficiency was calculated per **Equation 1**.

$$Removal\ Eff.(\%) = \frac{\begin{pmatrix} Avg.Inf.TSS\ Conc.\times \\ Total\ Vol.of \\ Test\ Water \end{pmatrix} - \begin{pmatrix} Adj.Eff.TSS\ Conc.\times \\ Total\ Vol.of \\ Eff.Water \end{pmatrix} - \begin{pmatrix} Avg.Drawdown\ TSS\ Conc.\times \\ Total\ Vol.of\ Drawdown \end{pmatrix}}{Avg.Inf.TSS\ Conc.\times Total\ Vol.of\ Test\ Water} \times 100$$

Equation 1 Equation for Calculating Removal Efficiency

2.4 Sediment Mass Loading Capacity Testing

Upon completing the Removal Efficiency Testing, the protocol continued with Sediment Mass Loading Capacity Testing used to determine the maximum mass of test sediment that can be captured by the MTD at 90% MTFR prior to passing the design operating head.

2.5 Scour Testing

No scour testing was conducted. Although the 4-ft diameter Manhole Up-Flo® Filter installation is commercially provided with an internal bypass, this feature was not tested for certification. The efficiency measurements produced will be applicable to off-line configurations that are designed to divert flows in excess of the MTFR away from the filter modules.

2.6 Quality Objectives and Criteria

Samples sent to the external lab were shipped to the lab for analysis as soon as possible following the test run. Samples analyzed in-house were observed by the third-party witness and were conducted immediately following sample collection.

A Chain of Custody form was used for externally analyzed samples to record sample containers and sampling date and time for each test run. A copy of these forms was also maintained by Hydro. Sample bottles were labeled to identify the test run and sample type (background or effluent), which corresponded to the sample identification on the Chain of Custody form. All sample marking and transportation was observed by the third-party witness.

Data was recorded and maintained in accordance with standard laboratory procedures used at Hydro. Hard copies of all original data sets are maintained on site. The individual conducting the tests is responsible for managing the data sheets that accompany all tests. Data analysis was primarily done in Microsoft Excel.

The following quality criteria were used to compare to results from individual test runs:

- Background TSS concentrations exceed 20 mg/L
- Temperature of test water exceeds 80 degrees Fahrenheit
- Variation in calculated influent concentration exceeds 10% of target concentration
- COV of dry calibration samples exceeds 0.10

The 2013 protocol to Assess Total Suspended Solids Removal by a Hydrodynamic Sedimentation Manufactured Treatment Device published by the NJDEP specifies that flow rates used in testing HDS systems must not vary more than 10% from the target flow rate and must maintain a COV of 0.03. This guidance and prior filtration testing precedent was used as a guideline for the filter test program.

3. Performance Claims

Per the NJDEP verification procedure and based on the laboratory testing conducted for the Up-Flo® Filter, the following are the performance claims made by Hydro International.

Total Suspended Solids (TSS) Removal Efficiency

The Up-Flo® Filter when configured with Filter Ribbon 450R, housed in 2.08 ft^2 test vessel with 36 inch sump (47.5 inches from sump floor to discharge invert), with 11.5 inch inlet drop, operating under a hydraulic loading rate of 10 gpm per Filter Module and evaluated in accordance with the *New Jersey Department of Environmental Protection Laboratory Protocol to Assess Total Suspended Solids Removal by a Filtration Manufactured Treatment Device* achieves removal efficiencies of the NJDEP specified gradation of silica of 84%.

Maximum Treatment Flow Rate (MTFR)

The MTFR for the Up-Flo® Filter system tested equates to 10 gpm per module when configured with Filter Ribbon 450R.

Maximum Sediment Storage Depth

The maximum sediment storage depth tested was 1 inch. This corresponds to a volume of 0.17 cu.ft. for the Up-Flo® Filter configuration tested. Additional storage will be provided if more than 600 lbs per acre per year is expected.

Effective Sedimentation Area

The Effective Treatment and Sedimentation areas is the surface area of the 17-5/16 inch square Filter Test Tank. This is 300 square inches and equates to 2.08 square feet.

Wet Volume and Detention Time

The Wet Volume is defined as the sump and wet influent piping of a filtration MTD and is determined by the height of the discharge port and area of the Filter Test Tank or 3.875-feet × 2.08 ft^2. The resulting Wet Volume was 8.1 cubic feet (230 liters or 60.6 gallons). This corresponded to a detention time of 364 seconds at the MTFR.

Effective Filtration Area

As tested, the effective filtration area for a single Filter Ribbon 450R is 45-inches long and 10-inches wide or 450 square inches. Flow can enter from both sides of the ribbon, so the total filtration area is 900 square inches per ribbon and 2700 square inches (18.75 $ft.^2$) for the three ribbons installed in the single module test set up.

Minimum Sedimentation Area

The minimum sedimentation area for a single module with three Filter Ribbon 450R is 300 square inches of sedimentation area per 2700 square inches of filter ribbon or 0.11 $ft.^2$ of sedimentation area per filter ribbon area.

Sediment Mass Load Capacity

Considering the change in operating head relative to the sediment mass captured, the Up-Flo® Filter with 450R Filter Ribbon Media has a mass loading capacity of 14.7 lbs per module.

Maximum allowable inflow drainage area

To ensure the drainage area and expected annual sediment load does not cause higher than intended bypass flows, the sediment mass capture capacity of 14.7 pounds per module is used to limit the treatable drainage area per module. Given the protocol requirements for "Maximum Allowable Inflow Drainage Area" the Up-Flo® Filter can effectively treat 0.025 acres per module at 600 lbs per acre of drainage area annually.

4. Supporting Documentation

The NJDEP Procedure (NJDEP, 2013a) for obtaining verification of a stormwater manufactured treatment device (MTD) from the New Jersey Corporation for Advanced Technology (NJCAT) requires that "copies of the laboratory test reports, including all collected and measured data; all data from performance evaluation test runs; spreadsheets containing original data from all performance test runs; all pertinent calculations; etc." be included in this section. This was discussed with NJDEP and it was agreed that as long as such documentation could be made available by NJCAT upon request that it would not be prudent or necessary to include all this information in this verification report. This information was provided to NJCAT and is available upon request.

4.1 Removal Efficiency

During initial testing, 23 removal efficiency testing runs were completed in accordance with the NJDEP filter protocol. The target flow rate and influent sediment concentration were 10 gpm (with a COV< 0.03) and 200 mg/L ± 10% (with a COV< 0.10) respectively.

Test run No. 3 was noted for exceeding the acceptable influent concentration range. Test run No. 6 was noted for exceeding the acceptable background concentration. Both test runs were excluded from the removal efficiency calculations.

One result was omitted during the data analysis. In a test between No.12 and No.13, the peristaltic pump feed hose ruptured and had to be replaced. The results of this test were not analyzed and not reported.

The flow meter and data logger took a reading every thirty second. The flow data has been summarized in **Table 3** including the compliance to the QA/QC acceptance criteria. The average flow for all removal efficiency runs was 10 gpm. The temperature data is summarized in **Table 4**.

Influent Sediment Concentrations are summarized in **Table 5**, Background Sediment Concentrations are summarized in **Table 6**, and Adjusted Effluent Concentrations are summarized in **Table 7**, along with compliance to NJDEP protocol QA/QC criteria.

The remaining tables report all other parameters measured that are required to demonstrate compliance to NJDEP protocol QA/QC criteria. **Table 8** summarizes the removal efficiencies for

the first 10 qualifying test runs followed by the remaining runs. The removal efficiency for the first 10 qualifying test runs was 81.4% and it consistently increased for the remaining test runs so that the overall removal efficiency for all qualifying test runs was 84.2%.

Table 3 Removal Efficiency Flow Rates

Run #	Average Flow Rate (gpm)	COV	QA/QC Compliance (COV < 0.03)
1	10.01	0.007	Yes
2	9.93	0.002	Yes
3	9.95	0.003	Yes
4	10.13	0.002	Yes
5	10.11	0.011	Yes
6	10.04	0.003	Yes
7	10.01	0.006	Yes
8	10.04	0.001	Yes
9	9.93	0.002	Yes
10	9.93	0.003	Yes
11	10.00	0.005	Yes
12	9.85	0.005	Yes
13	9.99	0.003	Yes
14	10.00	0.002	Yes
15	10.07	0.002	Yes
16	10.01	0.006	Yes
17	10.03	0.001	Yes
18	9.99	0.016	Yes
19	10.06	0.003	Yes
20	10.01	0.004	Yes
21	9.98	0.003	Yes
22	10.01	0.005	Yes
23	10.03	0.007	Yes
Overall Average Flow 10.00 gpm			

Table 4 Removal Efficiency Temperatures

Run #	Maximum Temperature (°F)	QA/QC Compliance (Max < 80°F)
1	74.4	Yes
2	75.0	Yes
3	75.0	Yes
4	74.9	Yes
5	75.5	Yes
6	74.4	Yes
7	75.0	Yes
8	75.0	Yes
9	75.3	Yes
10	76.0	Yes
11	74.9	Yes
12	75.7	Yes
13	74.9	Yes
14	74.9	Yes
15	75.3	Yes
16	74.4	Yes
17	74.7	Yes
18	76.7	Yes
19	74.0	Yes
20	76.1	Yes
21	75.3	Yes
22	74.4	Yes
23	76.7	Yes
Overall Average Temp 75.2˚ F		

Table 5 Removal Efficiency Influent Sediment Concentrations

Run #	Run Time (min)	Weight (mg)	Duration (s)	Feed Rate (mg/s)	Avg. Flow Rate (l/s)	Sediment Conc. (mg/l)	QA/QC (COV < 0.1)
1	0:00	1226	10	123	0.6315	194	Yes
	15:00	1502	10	150	0.6315	238	
	30:00	1436	10	144	0.6315	227	
	Average			139		220	
	COV			0.10			
2	0:00	1149	10	115	0.6265	183	Yes
	15:00	1239	10	124	0.6265	198	
	30:00	1219	10	122	0.6265	195	
	Average			120		192	
	COV			0.04			
3	0:00	1411	10	141	0.6278	225	No
	15:00	1427	10	143	0.6278	227	
	30:00	1411	10	141	0.6278	225	
	Average			142		226	
	COV			0.01			
4	0:00	1206	10	121	0.6390	189	Yes
	15:00	1344	10	134	0.6390	210	
	30:00	1252	10	125	0.6390	196	
	Average			127		198	
	COV			0.06			
5	0:00	1307	10	131	0.6377	205	Yes
	15:00	1449	10	145	0.6377	227	
	30:00	1436	10	144	0.6377	225	
	Average			140		219	
	COV			0.06			
6	0:00	1210	10	121	0.6331	191	Yes
	15:00	1248	10	125	0.6331	197	
	30:00	1169	10	117	0.6331	185	
	Average			121		191	
	COV			0.03			
7	0:00	1251	10	125	0.6315	198	Yes
	15:00	1247	10	125	0.6315	197	
	30:00	1396	10	140	0.6315	221	
	Average			130		206	
	COV			0.07			

8	0:00	1251	10	125	0.6337	197	Yes
	15:00	1371	10	137	0.6337	216	
	30:00	1399	10	140	0.6337	221	
	Average			134		212	
	COV			0.06			
9	0:00	2390	20	120	0.6265	191	Yes
	15:00	2516	20	126	0.6265	201	
	30:00	2757	20	138	0.6265	220	
	Average			128		204	
	COV			0.07			
10	0:00	2360	20	118	0.6266	188	Yes
	15:00	2525	20	126	0.6266	201	
	30:00	2523	20	126	0.6266	201	
	Average			123		197	
	COV			0.04			
11	0:00	2420	20	121	0.6312	192	Yes
	15:00	2458	20	123	0.6312	195	
	30:00	2524	20	126	0.6312	200	
	Average			123		195	
	COV			0.02			
12	0:00	2336	20	117	0.6213	188	Yes
	15:00	2386	20	119	0.6213	192	
	30:00	2445	20	122	0.6213	197	
	Average			119		192	
	COV			0.02			
13	0:00	2530	20	127	0.6301	201	Yes
	15:00	2789	20	139	0.6301	221	
	30:00	2757	20	138	0.6301	219	
	Average			135		214	
	COV			0.05			
14	0:00	2516	20	126	0.6309	199	Yes
	15:00	2642	20	132	0.6309	209	
	30:00	2793	20	140	0.6309	221	
	Average			133		210	
	COV			0.05			
15	0:00	2468	20	123	0.6352	194	Yes
	15:00	2619	20	131	0.6352	206	
	30:00	2633	20	132	0.6352	207	
	Average			129		203	
	COV			0.04			

16	0:00	2447	20	122	0.6317	194	Yes
	15:00	2495	20	125	0.6317	197	
	30:00	2653	20	133	0.6317	210	
	Average			127		200	
	COV			0.04			
17	0:00	2444	20	122	0.6330	193	Yes
	15:00	2874	20	144	0.6330	227	
	30:00	2624	20	131	0.6330	207	
	Average			132		209	
	COV			0.08			
18	0:00	2529	20	126	0.6303	201	Yes
	15:00	2716	20	136	0.6303	215	
	30:00	2781	20	139	0.6303	221	
	Average			134		212	
	COV			0.05			
19	0:00	2444	20	122	0.6348	192	Yes
	15:00	2874	20	144	0.6348	226	
	30:00	2624	20	131	0.6348	207	
	Average			132		209	
	COV			0.08			
20	0:00	2494	20	125	0.6315	197	Yes
	15:00	2463	20	123	0.6315	195	
	30:00	2572	20	129	0.6315	204	
	Average			125		199	
	COV			0.02			
21	0:00	2558	20	128	0.6296	203	Yes
	15:00	2556	20	128	0.6296	203	
	30:00	2653	20	133	0.6296	211	
	Average			129		206	
	COV			0.02			
22	0:00	2541	20	127	0.6315	201	Yes
	15:00	2841	20	142	0.6315	225	
	30:00	2788	20	139	0.6315	221	
	Average			136		216	
	COV			0.06			
23	0:00	2552	20	128	0.6329	202	Yes
	15:00	2795	20	140	0.6329	221	
	30:00	2630	20	132	0.6329	208	
	Average			133		210	
	COV			0.05			

Table 6 Removal Efficiency Background Sediment Concentrations

Run #	Background Sediment Concentration (mg/L)				QA/QC Compliance (Max < 20 mg/L)
	1	2	3	Mean	
1	7	12	8	9	Yes
2	4	5	7	5	Yes
3	7	8	10	8	Yes
4	14	13	17	15	Yes
5	15	15	17	16	Yes
6	24	23	26	24	No
7	4	6	8	6	Yes
8	9	10	12	10	Yes
9	8	9	11	9	Yes
10	13	12	14	13	Yes
11	4	4	6	5	Yes
12	9	9	11	10	Yes
13	11	9	11	10	Yes
14	4	4	6	4	Yes
15	8	21	10	13	Yes
16	11	10	12	11	Yes
17	14	13	15	14	Yes
18	2	2	4	2	Yes
19	6	5	6	5	Yes
20	6	6	7	6	Yes
21	8	7	7	8	Yes
22	1	1	2	1	Yes
23	3	3	4	3	Yes

Table 7 Removal Efficiency Effluent Concentrations

	Effluent Suspended Sediment Concentration (mg/L)						
Run #	**1**	**2**	**3**	**4**	**5**	**6**	**Mean**
1	50	48	48	52	51	55	51
2	44	45	45	50	61	49	49
3	51	53	53	61	58	57	56
4	54	58	47	56	59	60	56
5	57	60	61	62	63	64	61
6	61	61	62	68	65	65	64
7	43	45	45	47	46	46	45
8	46	47	46	48	50	49	48
9	39	40	40	44	44	33	40
10	45	47	47	49	49	48	48
11	34	37	34	37	37	39	36
12	39	41	46	44	43	43	43
13	37	40	41	43	43	43	41
14	33	33	33	37	38	37	35
15	36	37	36	38	38	38	37
16	35	36	37	39	37	38	37
17	42	40	40	42	45	43	42
18	32	33	33	37	36	36	35
19	35	35	36	39	37	36	36
20	29	28	30	33	35	33	31
21	35	35	35	39	37	35	36
22	22	22	23	26	28	30	25
23	20	19	20	28	31	31	25

Table 8 Removal Efficiency Results

Run #	Average Influent TSS (mg/L)	Average Adjusted Effluent TSS (mg/L)	Average Adjusted Drawdown TSS (mg/L)	Influent Volume (L)	Effluent Volume (L)	Draindown Volume (L)	Mass Loading (Kg)	Mass Captured (Kg)	Run Removal Efficiency by Mass
1	220	42	46	1676	1673	4	0.369	0.299	81.0%
2	192	44	45	1663	1660	4	0.319	0.246	77.1%
4	198	41	44	1696	1692	4	0.336	0.267	79.5%
5	219	45	46	1693	1689	4	0.371	0.294	79.2%
7	206	39	40	1677	1672	4	0.345	0.278	80.6%
8	212	38	39	1683	1678	4	0.356	0.293	82.3%
9	204	31	35	1663	1659	4	0.339	0.288	85.0%
10	197	35	37	1664	1659	4	0.328	0.27	82.3%
11	195	32	33	1676	1671	5	0.328	0.275	83.8%
12	192	33	34	1650	1645	5	0.317	0.263	83.0%
Mass Subtotals (Excluding Test Runs 3&6)							3.408	2.773	
Average Removal Efficiency (First 10 Qualifying Test Runs)									**81.4%**
13	214	31	32	1673	1667	5	0.357	0.306	86.0%
14	210	31	32	1675	1669	6	0.352	0.300	85.0%
15	203	24	25	1686	1680	6	0.342	0.301	88.0%
16	200	26	29	1677	1671	6	0.336	0.292	87.0%
17	209	28	30	1681	1673	8	0.351	0.304	87.0%
18	212	32	36	1673	1663	10	0.355	0.301	85.0%
19	209	31	32	1685	1669	17	0.351	0.299	85.0%
20	199	25	26	1677	1655	22	0.333	0.291	87.0%
21	206	29	29	1672	1636	35	0.344	0.296	86.0%
22	216	24	30	1677	1634	43	0.362	0.322	89.0%
23	210	22	30	1680	1624	56	0.353	0.316	90.0%
Mass Subtotals (13-23)							3.836	3.328	
Total Mass (1-23; Excluding Test Runs 3&6)							7.244	6.101	
Average Removal Efficiency (1-23; Excl. 3&6)									**84.2%**

4.2 Sediment Mass Loading Capacity

The Sediment Mass Loading Capacity study was a continuation of the removal efficiency study. As required by the protocol, all aspects of the testing remained the same, except for the flow rate which was reduced to 90% of the MTFR, when the maximum driving head is exceeded.

The rate of increasing water elevation between tests was noticeable after Test Run 18 and the maximum driving head was reached at Test Run 24. The flow rate was reduced to 9 gpm for Test Run 25. Similar to test Run 24, the operating head exceeded the maximum driving head for Test 25. Given the results of Test Runs 24 and 25, the mass loading capacity was based on the mass

captured for Test Runs 1-23 only. A summary of the Sediment Mass Loading Capacity is shown in **Table 9.** The relationship between removal efficiency and sediment mass loading is illustrated in **Figure 7**. The total mass load that was injected during all 23 test runs was 7.944 Kg or 17.514 pounds. The total mass captured for all 23 test runs was 6.651 Kg or 14.663 pounds.

Table 9 Sediment Mass Loading Capacity Summary

Run #	Average Influent TSS (mg/L)	Average Adjusted Effluent TSS (mg/L)	Average Adjusted Drawdown TSS (mg/L)	Influent Volume (L)	Effluent Volume (L)	Draindown Volume (L)	Mass Loading (kg)	Mass Captured (kg)	Run Removal Efficiency by Mass
1	220	42	46	1676	1673	4	0.369	0.298	80.9%
2	192	44	45	1663	1660	4	0.319	0.246	77.1%
3	226	48	50	1667	1663	4	0.377	0.297	78.8%
4	198	41	44	1696	1692	4	0.336	0.266	79.3%
5	219	45	46	1693	1689	4	0.371	0.295	79.5%
6	191	40	39	1681	1677	4	0.321	0.254	79.1%
7	206	39	40	1677	1672	4	0.345	0.280	81.1%
8	212	38	39	1683	1678	4	0.357	0.293	82.1%
9	204	31	35	1663	1659	4	0.339	0.288	84.8%
10	197	35	37	1664	1659	4	0.328	0.270	82.2%
11	195	32	33	1676	1671	5	0.327	0.273	83.6%
12	192	33	34	1650	1645	5	0.317	0.262	82.8%
13	214	31	32	1673	1667	5	0.358	0.306	86.0%
14	210	31	32	1675	1669	6	0.352	0.300	85.0%
15	203	24	25	1686	1680	6	0.342	0.302	88.0%
16	200	26	29	1677	1671	6	0.335	0.292	87.0%
17	209	28	30	1681	1673	8	0.351	0.304	87.0%
18	212	32	36	1673	1663	10	0.355	0.301	85.0%
19	209	31	32	1685	1669	17	0.352	0.300	85.0%
20	199	25	26	1677	1655	22	0.334	0.292	87.0%
21	206	29	29	1672	1636	35	0.344	0.296	86.0%
22	216	24	30	1677	1634	43	0.362	0.322	89.0%
23	210	22	30	1680	1624	56	0.353	0.315	90.0%
				Total Mass (Test Runs 1-23)			7.944	6.651	Kg
							17.514	14.663	lbs

Figure 7 Sediment Mass Load Captured vs Removal Efficiency

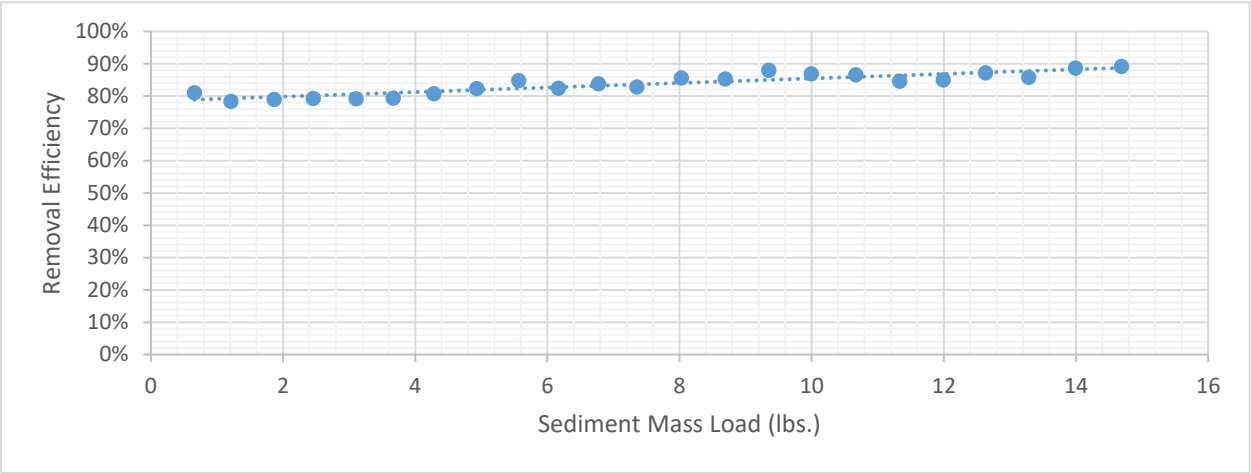

4.3 Filter Driving Head

Driving head is defined as the vertical distance between the static water level in the Filter Test Tank measured with no flow before a test run and the water level measured at the end of a test run. Thus, the filter driving head was measured from the Conveyance Channel invert and was observed to increase with sediment mass load. This relationship is shown in **Table 10** and is plotted below in **Figure 8.**

Table 10 Sediment Mass Loading Driving Head Summary

Run #	HL above Channel (inches) (inches)	Mass Loading (lbs)	Mass Captured (lbs)
1	0.78	0.813	0.658
2	0.78	0.704	0.543
3	0.81	0.831	0.654
4	0.84	0.740	0.587
5	0.91	0.817	0.649
6	0.91	0.708	0.560
7	0.91	0.762	0.618
8	0.91	0.787	0.646
9	0.88	0.748	0.634
10	0.91	0.723	0.594
11	0.98	0.721	0.602
12	1.01	0.698	0.578
13	1.12	0.789	0.675
14	1.15	0.775	0.661

15	1.25	0.755	0.665
16	1.32	0.739	0.643
17	1.59	0.775	0.671
18	2.1	0.782	0.664
19	3.36	0.776	0.661
20	4.45	0.736	0.643
21	7.17	0.759	0.653
22	8.67	0.799	0.709
23	11.36	0.778	0.695
TOTAL		17.514	14.663

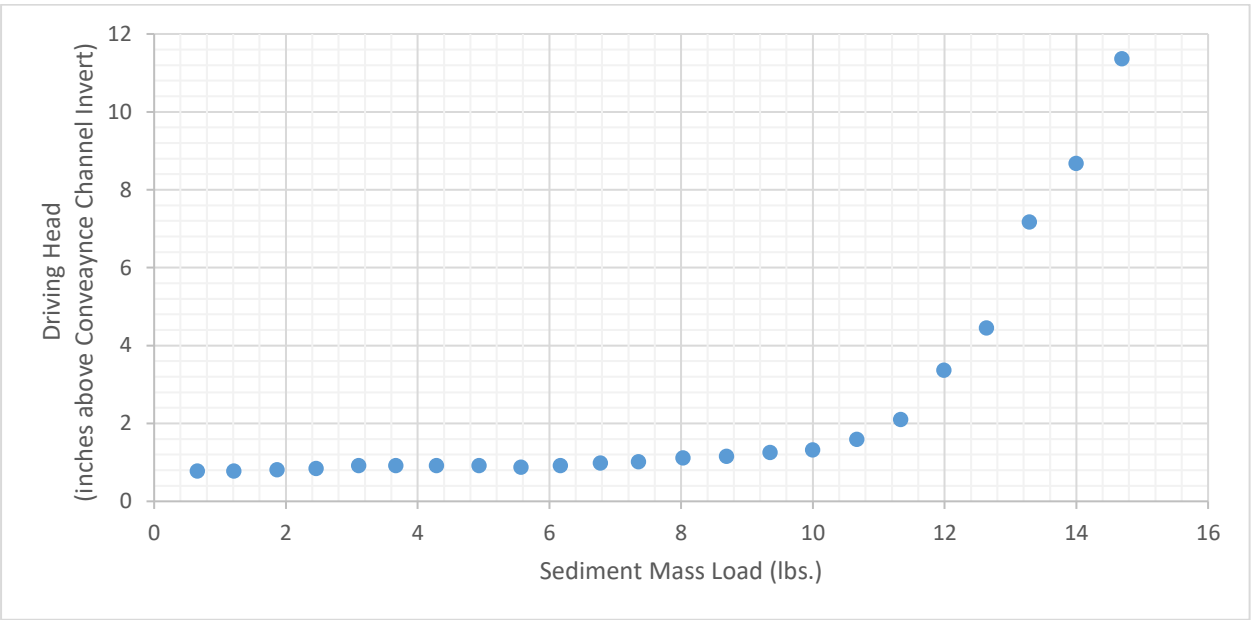

Figure 8 Sediment Mass Load Captured vs Driving Head

Up-Flo® Filter Modules configured for installation in a vault consist of several modules in a row connected to a single Outlet Module. The space above the Filter Ribbons within each Filter Module forms a channel when modules are connected together. This (conveyance) channel is a conduit for transporting filtered water within the Filter Modules into the Outlet Module and to the downstream storm drain piping. The channel is designed to minimize restriction and water depth when multiple modules are connected. In operation with multiple Filter Modules, the filtered water travels through the Conveyance Channel so that the total flow closest to the Outlet Module will be the summation of all filtered flows from adjacent Filter Modules.

The treatment flow rate per module was tested at 10-gpm. At 10-gpm with fresh filter ribbons the depth of water in the Conveyance Channel is around 3/4-in. As the filter ribbon becomes occluded, more driving head in the Filter Test Tank is required to convey the same 10-gpm. As shown in the drawing of the Outlet Module in **Figure 9**, there is 18-1/2 inches above the conveyance channel

invert for driving head to build up before the system begins to bypass directly into the top of the Outlet Module via a Bypass Hood (not shown). The total height of the Outlet Module chute is 30-inches and is referred to as the "Operating Head".

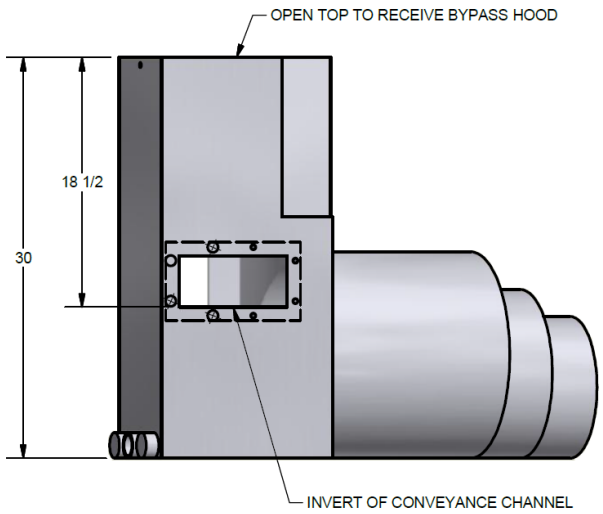

Figure 9 Drawing of Up-Flo Filter Outlet Module

The driving head required is the difference between the water level outside the module and depth inside the conveyance channel. With each additional module the water depth in the channel increases and the water depth inside the Filter Module channel is estimated using Manning's Equation. In the chart below (**Figure 10**) the water level associated with the number of modules in a row is shown. With five modules the estimated channel water depth is 1 3/16-in. With 25 modules the estimated channel water depth is 3-1/2 inches

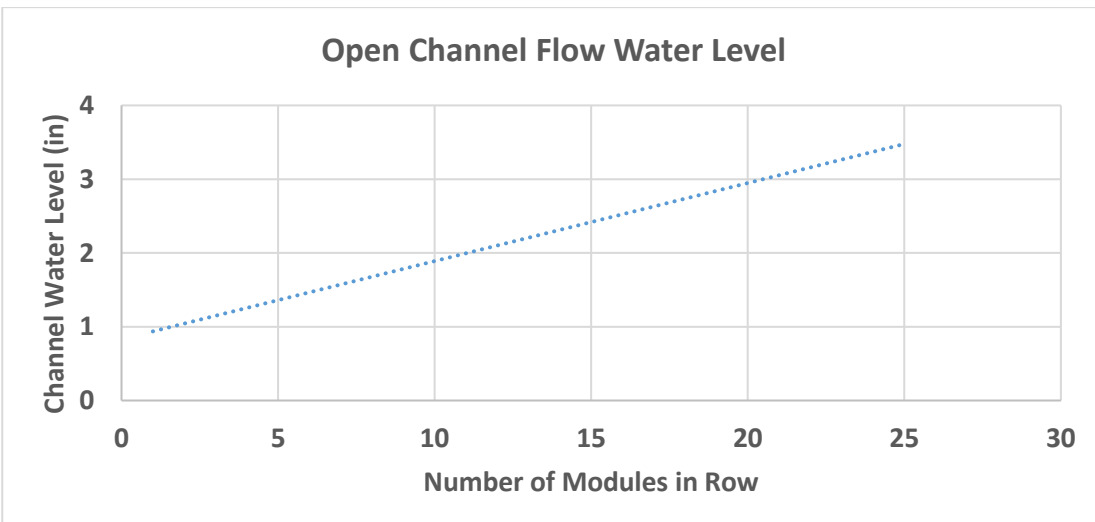

Figure 10 Relationship between Number of Modules and Channel Water Level

Based on Test Run 23 results, the measured driving head was less than 12 inches. With a depth of flow in the conveyance channel of 3 ½-inches, the maximum driving head of 18.5-inches is not reached. This means the system is conservatively designed for rows with fewer than 25 modules, which is the maximum suggested row length.

5. Design Limitations

If the Up-Flo® Filter is designed and installed correctly, there is minimal possibility of failure. The system will be designed to convey stormwater up to the maximum flow rate of the storm sewer system. Similar to any other correctly designed treatment technology, a change in the characteristics of the contributing drainage area can lead to poor performance. An increase in imperviousness can result in higher peak flows which can exceed the treatment capacity of the Up-Flo® Filter. A change in land use can result in higher solids loading or a change in the type of stormwater pollutants. High solids loading could result in unrealistic maintenance intervals. Different stormwater pollutants may not be treatable with the engineered media that was originally specified. Caution should obviously be used during the design of any stormwater treatment system if changes in the contributing area are expected.

Required soil characteristics

All Up-Flo® Filters are pre-assembled in concrete structures manufactured by ISO certified precast facilities in accordance with all applicable ASTM specifications and regional regulations. Subsequently all systems are designed to accommodate any site-specific limitations or constraints imposed by soil type, conditions or characteristics. In addition, all internal filter components are molded from linear low-density polyethylene while support frames and assembly hardware consist of minimum grade 304 stainless steel for corrosion resistance.

Slope

The Up-Flo® Filter outlet module permanently mounts in a fixed horizontal position running through the precast wall either directly outside of the vault or into an outlet chamber. In configurations where the outlet module pipe stub connects directly to the outlet pipe, slope is restricted to that permitted by the connecting coupling.

Maximum Filtration Rate

The maximum filtration rate of each Up-Flo® Filter system is contingent on the area of the filter, but more specifically the number of Filter Modules and total filter ribbon surface area. Given the test results, the Up-Flo® Filter with Filter Ribbon 450R will be sized to ensure the maximum filtration rate per module will be 0.533 gpm per ft^2 of filtration area and 4.81 gpm per ft^2 of sedimentation area per module.

Maintenance Requirements

Up-Flo® Filter Maintenance requirements vary according to site characteristics such as runoff area, types of surfaces (e.g., paved and/or landscaped), site activities (e.g., short-term or long-term parking), and site maintenance (e.g., sanding and sweeping). At a minimum Hydro International recommends inspection and maintenance should be conducted at intervals of no more than six

months during the first year of operation. Observations made during these initial service events may be used to derive a lasting site-specific inspection and maintenance program

Operating Head

The maximum Driving Head for the Up-Flo® Filter with filter Ribbon 450R is 18.5 inches above the conveyance channel. This is equivalent to an Operating Head of 30 inches measured from the invert of the Outlet Module tiered stub; the difference is the 11.5-inch required drop between the inlet and outlet pipe inverts to prevent a submerged inlet pipe. This is the maximum head required to maintain the MTFR and annual sediment load at the maximum modules per row. Since the flow is not controlled within the Filter Module, higher treated flows will occur until the ribbons trap the anticipated annual mass load. To ensure the MTFR is not exceeded, flow control prior to the Up-Flo® Filter is required.

Installation limitations

Hydro International provides installation instructions as well as product specific manufacturer specifications with each project submittal. Prior to scheduling delivery Hydro notifies the contractor with pick weights and specific handling instructions of/for the structure. Hydro International provides remote technical assistance for contractors as well as offers onsite engineering to facilitate/oversee proper installation.

Configurations

The Up-Flo® Filter has modular components to allow for differences in precast manufacture and preferences for source control design. In general, there are two configurations including 4-ft diameter precast manholes or vaults that have 1-4 filter bays and internal conveyance channels to manage peak bypass flows. The tested configuration submitted for verification corresponds with offline use of filter modules equipped with filter ribbons.

Structural Load limitations

All Up-Flo® Filters are pre-assembled in concrete structures manufactured by ISO certified precast facilities in accordance with all applicable ASTM specifications and/or site-specific loading requirements. All precast structures will have a minimum wall thickness sufficient to sustain HS20-44 loading requirements.

Pretreatment requirements

The Up-Flo® Filter is designed as a stand-alone device and requires no additional upstream treatment. However, for source control applications having high pollutant loads, inclusion of pretreatment can extend filter media longevity and reduce annual service requirements.

Limitations on tailwater

Tailwater conditions are carefully evaluated for each application. Ideally, the tailwater will be lower than 11-inches from the Outlet Invert. When the tailwater is higher than this, additional head will be required.

Depth of seasonal High-Water table

The Up-Flo® Filter is designed to be connected as part of a self-contained storm sewer network. The precast structure housing each Up-Flo® Filter is sealed according to regional specifications and designed to account for buoyancy forces.

6. Maintenance

Maintenance activities can be categorized by those that can be performed from outside the Up-Flo® Filter vessel and those that are performed inside the vessel. Maintenance performed from outside the vessel includes removal of floatables and oils that have accumulated on the water surface and removal of sediment from the sump. Maintenance performed inside the vessel includes removal and replacement of engineered filtration media. A vactor truck is required for removal of oils, water, sediment, and to enter the vessel for performing inside maintenance. Hydro's Up-Flo™ Operation and Maintenance Manual for I&M procedures is available at: https://www.hydro-int.com/sites/default/files/ribbon_uff_om_1806.pdf

Inspection

The frequency of inspection and maintenance can be determined in the field after installation. Based on site characteristics such as contributing area, types of surfaces (e.g., paved and/or landscaped), site activities (e.g., short-term or long-term parking), and site maintenance (e.g., sanding and sweeping), inspection and maintenance should be conducted at intervals of no more than six months during the first year of operation. Typically, maintenance is recommended once per year thereafter.

By removing the manhole cover and observing the water level in the manhole or vault, site personnel can determine when the Filter Ribbons have become blinded. The water elevation in the precast manhole or vault will not drain down after an event if the Ribbons are blinded and will be higher than the Filter Module lids. Otherwise, scheduled inspections will determine when one or more of the following maintenance thresholds have been reached:

- *Sediment depth at sump storage capacity*
  A sediment depth of 1-in. indicates the sump has reached its maximum capacity for Up-Flo® Filter installations configured with filter ribbons. A sediment probe, such as the Sludge-Judge®, can be used to determine the depth of the solids in the sump.

- *Blinding of Filter Ribbons*
  Observing water elevations and inspecting the filter ribbons is required to determine when they require replacement. If the water elevation is higher than the top of the module, the filter should be drained down, inspected and replaced if there is heavy loading or slime coating the filter ribbons.

- *Oil forming a measurable thickness on the surface of the water*
  The Up-Flo® Filter will prevent free oils from passing through the Filter Modules. However, storing volatile hydrocarbons is not recommended, since fine organic material

mixed with oil could have different results than what was tested. Any free oils on the water surface in excess of 1 inch should be removed.

The site-specific solids loading rate in the sump and in the engineered filtration media will be determined during the first year of Up-Flo® Filter operation. Starting with a clean sump, the solids loading rate in the sump will be calculated by measuring the sediment depth in the sump and dividing the depth by the correlating interval of time since it was cleaned.

After completion of the first year of operation, the inspection and maintenance intervals for cleaning the sump and replacing filter ribbons will be established. Removal of oils and floatables will occur at the same frequency unless the first year of operation indicates otherwise. Keeping to the established maintenance intervals is critical for long term performance of any filtration system.

Maintenance Procedures

The access port located at the top of the manhole or vault provides access to the Up-Flo® Filter vessel for maintenance personnel to enter the vessel and comfortably remove and replace the filter ribbons. The same access would be used for maintenance personnel working from the surface to net or skim debris and floatables or to vactor out sediment, oil, and water. Unless the Up-Flo® Filter has been installed in a very shallow unit, it is necessary to have personnel with OSHA-confined space entry performing the maintenance that occurs inside the vessel.

Maintenance activities include inspection, floatables removal, oil removal, sediment removal, and replacement of the ribbon assemblies. Depending on the site, some maintenance activities are required with greater frequency than others. In the case of floatables removal, a vactor truck is not required. Otherwise, a vactor truck is normally required for oil removal, removal of sediment from the sump, and to dewater the vessel for replacing filter ribbons. All inspection and maintenance activities should be recorded in an inspection and maintenance log.

Good housekeeping practices upstream of the Up-Flo® Filter can significantly extend filter ribbon life. For example, sweeping paved surfaces, collecting leaves and grass trimmings, and employing erosion control practices will reduce loading to the system. Filter ribbons should not be installed in the Filter Modules until construction activities are complete and site stabilization is effective.

Solids Disposal

Sediment, floatables, gross debris, and spent filter ribbons can generally be disposed of at the local landfill in accordance with local regulations. The toxicity of the residues produced will depend on the activities in the contributing drainage area. Testing of the residues may be required if they are considered potentially hazardous.

Sump water can generally be disposed of at a licensed water treatment facility but the local sewer authority should be contacted for permission prior to discharging the liquid. Significant accumulations of oils removed separately from sump water should be transported to a licensed hazardous waste treatment facility for treatment or disposal.

In all cases, local regulators should be contacted about disposal requirements.

7. Statements

The following signed statements from the manufacturer (Hydro International), third-party observer (FB Environmental) and NJCAT are required to complete the NJCAT verification process. In addition, it should be noted that this report has been subjected to public review (e.g. stormwater industry) and all comments and concerns have been satisfactorily addressed.

Stormwater Solutions

Hydro International®

Turning Water Around…®

April 18th, 2018

Dr. Richard Magee, Sc.D., P.E., BCEE
Executive Director
New Jersey Corporation for Advanced Technology
c/o Center for Environmental Systems
Stevens Institute of Technology
One Castle Point on Hudson
Hoboken, NJ 07030

Re: Manufacturers Statement of Compliance

Dear Dr. Magee:

Hydro International has completed verification testing for the Up-Flo® Filter with filter ribbon media in accordance with the "*New Jersey Department of Environmental Protection (NJDEP) Laboratory Protocol to Assess Total Suspended Solids Removal by a Filtration Manufactured Treatment Device*" (January 25, 2013). As required by the "*NJDEP Procedure for Obtaining Verification of a Stormwater Manufactured Treatment Device from New Jersey Corporation for Advanced Technology (NJCAT)*", this letter serves as Hydro International's statement that all procedures and requirements identified in the aforementioned protocol and process document were met or exceeded.

Specifically, a single module Up-Flo® Filter fitted with 450R Filter Ribbon Media was tested at Hydro International's laboratory in Portland, Maine for efficacy and sediment mass loading. To ensure that all procedures and methods were met, a test plan was completed and submitted to NJCAT for review and approval, all testing and sample collection was conducted under the direct supervision of the independent observer, FB Environmental Associates, and all collected samples were sent to either of two independent and certified laboratories; GeoTesting Express for particle size analysis or Maine Environmental Laboratories for measuring suspended solid concentrations. With this in mind, the preparation of the verification report and the documentation contained therein fulfill the submission requirements of the process document and protocol.

If you have any questions or comments regarding the verification, please do not hesitate to contact us.

Sincerely,

David Scott, CPSWQ
Technical Product Manager

Hydro International (Stormwater), 94 Hutchins Drive, Portland ME 04102
Tel: (207) 756-6200 Fax: (207) 756-6212 Web: www.hydro-int.com

STATEMENT OF THIRD PARTY OBSERVER

To: **Dave Scott, Hydro International, Portland, Maine**

From: Forrest Bell, FB Environmental Associates

Subject: **Third Party Witness of Hydro International Up-Flo® Filter**

Date: March 20, 2018

cc: Andrew Anastasio, Hydro International; Jeremy Fink, Hydro International; Margaret Burns, FB Environmental Associates

---

Statement of Third Party Observer

FB Environmental served as the third-party observer for the tests performed on the Up-Flo® Filter by Hydro International in November and December of 2017 and January of 2018 to achieve certification through the New Jersey Department of Environmental Protection (NJDEP) according to the *New Jersey Department of Environmental Protection Process for Approval of Use for Manufactured Treatment Devices*. The test was performed by Hydro International staff at their laboratory located at 94 Hutchins Drive in Portland, Maine. A member of our staff verified compliance with the laboratory test protocol above, and our staff member was physically present to observe the full duration of the laboratory test.

We have also reviewed the data, calculations, and conclusions associated with the removal efficiency testing in the *NJCAT Technology Verification: Up-Flo® Filter (450R Filter Ribbon Media)* report by Hydro International, dated March 2018, and state that they conform to what we saw during our supervision as third-party observer.

Forrest Bell

March 20, 2018

Signed: Date:

STATEMENT OF DISCLOSURE – THIRD PARTY OBSERVER

To: **Dave Scott, Hydro International, Portland, Maine**

From: Forrest Bell, FB Environmental Associates

Subject: **Third Party Observer Statement of Disclosure under *New Jersey Department of Environmental Protection Process for Approval of Use for Manufactured Treatment Devices***

Date: March 20, 2018

cc: Andrew Anastasio, Hydro International; Jeremy Fink, Hydro International; Margaret Burns, FB Environmental Associates

---

Statement of Disclosure – Third Party Observer

FB Environmental has no financial conflict of interest regarding the test results of the stormwater device testing outlined in the *NJCAT Technology Verification: Up-Flo® Filter (450R Filter Ribbon Media)* report by Hydro International, dated March 2018.

Disclosure Record

FB Environmental has provided the service of third party observer for tests performed by Hydro International in November and December of 2017 and January of 2018. The tests assessed the removal efficiency of the Up-Flo® Filter using gravitational separation of floating and settling materials, screening, and filtering of polluted stormwater using filter ribbons with a length extended from 28.5 inches to 45.0 inches. Beyond this, FB Environmental and Hydro International have no relationships that would constitute a conflict of interest. For example, we have no ownership stake, do not receive commissions, do not have licensing agreements, and do not receive funds or grants beyond those associated with the testing program.

Forrest Bell

March 20, 2018

Signed: Date:

Center for Environmental Systems

Stevens Institute of Technology

One Castle Point

Hoboken, NJ 07030-0000

April 20, 2018

Jim Murphy, Chief
NJDEP
Bureau of Non-Point Pollution Control
Bureau of Water Quality
401 E. State Street
Mail Code 401-02B, PO Box 420
Trenton, NJ 08625-0420

Dear Mr. Murphy,

Based on my review, evaluation and assessment of the testing conducted on a full-scale, commercially available Hydro International Up-Flo® Filter Module fitted with three 45-inch filter ribbon media, installed in a Filter Test Tank at Hydro's full-scale hydraulic testing facility in Portland, Maine, with FB Environmental Consultants providing independent third-part oversight, the test protocol requirements contained in the "New Jersey Department of Environmental Protection Laboratory Protocol to Assess Total Suspended Solids Removal by a Filtration Manufactured Treatment Device" (NJDEP Filter Protocol, January 2013) were met consistent with the NJDEP Approval Process. Specifically:

Test Sediment Feed

The test sediment was a blend of commercially available silica sand grades supplied by AGSCO Corporation and US Silica Company. The sediment was blended by Hydro International. The particle size distribution was independently verified by GeoTesting Express certifying that the supplied silica meets the specification within tolerance as described in Section 5B of the NJDEP protocol and was acceptable for use. The d_{50} of the sediment was 53 µm, significantly less than the NJDEP specification of <75 µm.

Removal Efficiency Testing

Ten (10) removal efficiency testing runs were completed in accordance with the NJDEP test protocol. The target flow rate and influent sediment concentration were 10 gpm and 200 mg/L respectively. All ten runs met the protocol requirements for flow rate COV and influent sediment concentration COV. One run slightly exceeded the protocol influent concentration of 200 ±10% mg/L and one run exceeded the acceptable background concentration. Maximum temperature and background sediment concentrations met protocol requirements as well. The average sediment removal efficiency by mass for the ten runs was 81.3%.

Sediment Mass Loading Capacity

The Sediment Mass Loading Capacity study was a continuation of the removal efficiency study. As required by the protocol, all aspects of the testing remained the same, except for the flow rate which was reduced to 90% of the MTFR, when the maximum driving head was exceeded.

The rate of increasing water elevation between tests was noticeable after Test Run 18 and the maximum driving head was reached at Test Run 24. The flow rate was reduced to 9 gpm for Test Run 25. Similar to test Run 24, the operating head exceeded the maximum driving head for Test 25. Given the results of Test Runs 24 and 25, the mass loading capture capacity of 14.7 pounds per Filter Module was based on the mass captured for Test Runs 1-23 only. The average removal efficiency by mass for the qualifying runs was 84.2%.

Scour Testing

No scour testing was conducted. Consequently, the Up-Flo® Filter is only being offered for off-line installation.

Sincerely,

Richard S. Magee, Sc.D., P.E., BCEE

8. References

ASTM D422-63. *Standard Test Method for Particle-Size Analysis of Soils.*

ASTM D3977-97. *Standard Test Methods for Determining Concentrations in Water Samples*.

Hydro International Limited 2016. *NJCAT Technology Verification: Up-Flo Filter*. Prepared by Hydro International. September 2016.

Hydro International Limited 2016. *Quality Assurance Project Plan for NJDEP Testing: Up-Flo Filter*. Prepared by Hydro International. August 2016.

NJDEP 2013a. *New Jersey Department of Environmental Protection Procedure for Obtaining Verification of a Stormwater Manufactured Treatment Device from New Jersey Corporation for Advanced Technology.* Trenton, NJ. January 25, 2013.

NJDEP 2013b. *New Jersey Department of Environmental Protection Laboratory Protocol to Assess Total Suspended Solids Removal by a Filtration Manufactured Treatment Device.* Trenton, NJ. January 25, 2013.

NJDEP 2013c. *New Jersey Department of Environmental Protection Laboratory Protocol to Assess Total Suspended Solids Removal by a Hydrodynamic Sedimentation Manufactured Treatment Device.* Trenton, NJ. January 25, 2013.

NJDEP 2013d. *NJCAT Technology Verification: Up-Flo Filter.* Trenton, NJ. November 2008.

NJDEP 2013e. *NJCAT Technology Verification: Up-Flo Filter.* Trenton, NJ. January 2015.

VERIFICATION APPENDIX

Introduction

- Manufacturer – Hydro International, 94 Hutchins Drive, Portland, ME 04102. *General Phone: (207)756-6200*. *Website:* www.hydro-int.com/us.
- MTD – Up-Flo® Filter verified models are shown in **Table A-2**.
- TSS Removal Rate – 80%
- Media – Filter Ribbon 450R
- Off-line installation

Detailed Specification

- Up-Flo® Filter design specifications, configurations, and NJDEP sizing tables are attached (**Table A-1** and **Table A-2**). The Sizing Table is valid for NJ following NJDEP Water Quality Design Storm Event of 1.25" in 2 hours (NJAC 7:8-5.5(a)).
- Maximum inflow drainage area
    - The maximum inflow drainage area is governed by the maximum treatment flow rate or sediment loading on the Ribbons for each model as presented in **Table A-2**.

- The driving head is the water elevation or height within the structure housing the Filter Modules and is measured from the conveyance channel invert. In the field, this water elevation is typically measured from the Outlet Module invert and is referred to as the Operating Head; the difference being 11.5 inches. The Outlet Module has a vertical chute that is 30 inches in height and open at the top to create an internal bypass. The maximum driving head before bypass occurs is 18.5 inches.

  For the single module tested, the maximum driving head measured after 23 test runs was 11.36 inches, which is 22.86 inches of operating head. With the 30-inch Outlet Module chute, there is an additional 7.14 inches of height available before bypass will occur. When 25 Filter Modules are connected, the depth of flow in the conveyance channel is expected to be 3.5 inches. This reduces the height prior to bypass to 3.64 inches allowing for any differences that may occur in the field during a storm event.

  For shallow sites that have less than 18.5 inches of driving head available, additional modules can be added to reduce the load per module, required driving head and maximum treatment area. Some designs may utilize internal weir walls rather than the Outlet Module Chute for site-specific bypass needs. The Up-Flo Filter with Ribbons will operate with inverts that are equal and with offset inverts but require an 11.5-inch drop to prevent a submerged inlet pipe. There are many configurations that allow for specific design challenges related to conveying surface runoff into the filter and site specific hydraulic conditions.

Hydro International provides design support for each project, working with consultants to ensure that the water quality runoff flow rate is treated, and the maximum treatment area is not exceeded prior to bypass.

- See Hydro's Up-Flo® Filter Operation and Maintenance Manual for I&M procedures at: https://www.hydro-int.com/sites/default/files/ribbon_uff_om_1806.pdf
- This certification does not extend to the enhanced removal rates under NJAC 7:8-5.5 through the addition of settling chambers (such as hydrodynamic separators) or media filtration practices (such as a sand filter).

Table A-1 Up-Flo® Filter Design Specifications

Model	# of Modules	Filter Ribbon Length	Effective Filtration Treatment Area	Effective Sedimentation Area	Total Wet Volume	Max. Treatment Flow Rate	Max. Sediment Mass Load	Max. Driving Head	Scaling Ratios		
			(EFTA)	(ESA)	(WV)	(MTFR)			EFTA:MTFR	ESA:EFTA	WV:EFTA
		(inches)	(ft^2)	(ft^2)	(ft^3)	(gpm)	(lbs)	(inches)			
Test Rig	1	45	18.75	2.08	8.1	10	14.7	18.5	1.875	0.111	0.432

Table A-2 Up-Flo® Filter Configurations and NJDEP Sizing Table

Configuration	Model Size	Max. Number of Filter Modules*	Max. MTFR	EFTA	Minumum**		Total Mass Capture	Max. Allowable Treatment Area***
					ESA	WV		
			(gpm)	(ft^2)	(ft^2)	(ft^3)	(lbs)	(acres)
MANHOLE	UFF-MH-450R	6	60	112.5	12.48	48.6	88.0	0.15
VAULT	UFF-ZV-25-450R	50	500	937.5	104	405	733	1.22
VAULT	UFF-ZV-50-450R	100	1000	1875	208	810	1466	2.44
VAULT	UFF-ZV-75-450R	150	1500	2813	312.0	1215	2199	3.67

*Note: The maximum number of filter modules in a row is 25. There are two rows for each Outlet module or max. 50 modules per Outlet Module. Actual vault sizes are site specific and shall adhere to the minimum ESA and WV.

**Note: The structure used to house the Filter Modules shall have at least the minimum sedimentation area and minimum wet volume

*** Note: The maximum allowable treatment area is based on an annual load of 600 lbs per acre