NJCAT TECHNOLOGY VERIFICATION

EcoStream™ Biofiltration System

Advanced Drainage Systems, Inc.

May 2023

Table of Contents

Table of Contents i

List of Figures……..... ii

List of Tables……. iii

1. Description of Technology 1

2. Laboratory Testing.....3
    2.1 Test Setup.....4
    2.2 Test Sediment.....7
    2.3 Sediment Removal Efficiency Testing 8
    2.4 Sediment Mass Loading Capacity Testing 9
    2.5 Scour Testing 9
    2.6 Laboratory Proficiency Testing 10

3. Performance Claims.....11

4. Supporting Documentation 11

5. Testing Results.....12
    5.1 Flow Rate 12
    5.2 Water Temperature 12
    5.3 Head 15
    5.4 Sediment Concentration and Removal Efficiency.....16
    5.5 Sediment Mass Loading.....33
    5.6 Scour 35

6. Design Limitations.....36

7. Maintenance Plan.....37

8. Statements.....39

9. References.....39

Verification Appendix 45

List of Figures

Figure 1 The EcoStream™ 4x4 1

Figure 2 Flow Path of the EcoStream™ 2

Figure 3 Photo of the Tested EcoStream™ 4x4 3

Figure 4 Schematic of the EcoStream™ 4x4 Test Configuration 4

Figure 5 Photograph of Flow Meter.....5

Figure 6 Photograph of Sediment Delivery Port.....5

Figure 7 Photograph of Background Sampling Port.....6

Figure 8 Average Particle Size Distribution of Test Sediment Verified by GTE.....7

Figure 9 Removal Efficiency vs. Sediment Mass Loading.....34

Figure 10 Head vs. Sediment Mass Loading 35

List of Tables

Table 1 Sampling Schedule for the EcoStream™ 4x4 Tests 6

Table 2 Particle Size Distribution of Test Sediment as Analyzed by GTE 8

Table 3 GTE Proficiency Testing Results 10

Table 4 Flow Rate and Temperature Summary 13

Table 5 Maximum Head 15

Table 6 Background TSS Concentrations 16

Table 7 Sediment Feed Rate Measurements 18

Table 8 Sediment Mass Recovered from Inlet Pipe 25

Table 9 Removal Efficiency Drawdown Losses 27

Table 10 Sediment Mass Delivered Summary 28

Table 11 Removal Efficiency and Mass Loading Capacity Results 30

Table 12 Sediment Mass Loading Summary 33

Table 13 Scour Sampling Schedule 35

Table 14 Scour TSS Results 36

Table A-1 EcoStream™ Biofiltration System Model Sizes and New Jersey Treatment Capability 47

1. Description of Technology

The EcoStream™ Biofiltration System ("EcoStream™") is an engineered biofiltration treatment system that removes contaminants from stormwater runoff through filtration, adsorption, and biological uptake. Biofiltration has long been used in stormwater treatment processes, and has proven effective at removing sediments, nutrients, heavy metals, and a wide variety of organic contaminants. The target pollutants, hydraulic retention time, filter media, pretreatment, and flow rate all affect the removal efficiency of the filter. This verification is solely focused on sediment removal.

The EcoStream™ can be configured in a precast concrete vault or other type of structurally adequate containment vessel (sub-surface containerized structure). As shown in three dimensions in **Figure 1**, the test unit, the EcoStream™ 4x4 model, is assembled inside a 4' x 4' concrete vault and consists of a biofiltration cell (B) and underdrain (F) surrounded by gravel (C). The structure contains the influent pipe (H), an energy dissipator (I), an effluent pipe (E) with a flow control orifice (J), and a high-flow bypass pipe (D). EcoStream™ is commercially available with a growth layer (A) and optional plants. The EcoStream™ 4x4 system was tested without plants. A standpipe (G) indicates the water head level. The thicknesses of the three media layers in the tested EcoStream 4x4 are 5 inches for Layer A (Growth Media), 15 inches for Layer B (Biofiltration Media), and 5.5 inches for Layer C (Gravel), representing a total media bed thickness of 25.5 inches. These three media layers are identified in **Figure 1**.

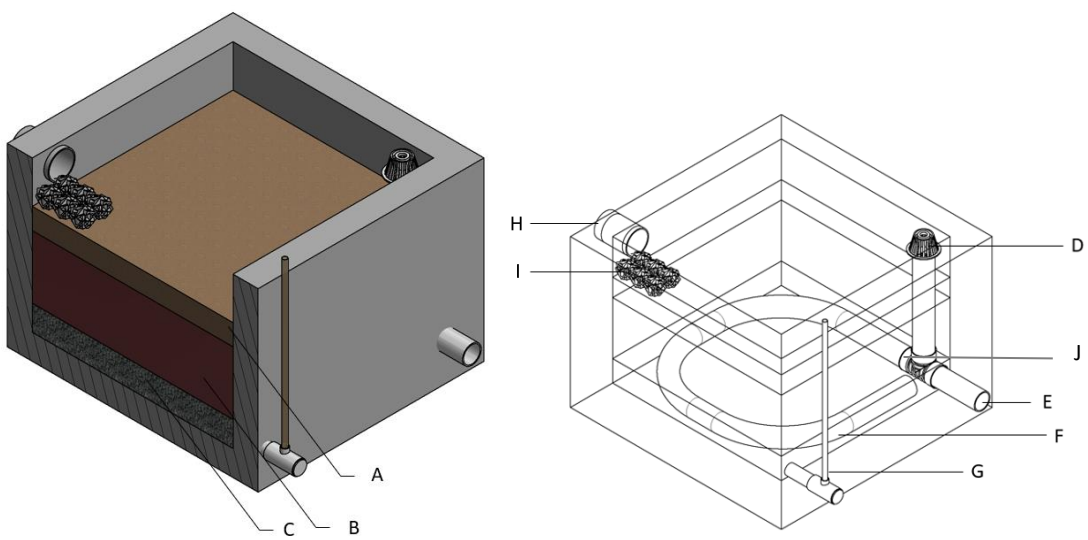

Figure 1 The EcoStream™ 4x4

A	Growth Media (5" Depth)	F	Underdrain
B	Biofiltration Media (15" Depth)	G	Standpipe
C	Gravel (5.5" Depth)	H	Inlet Pipe
D	High Flow Bypass Pipe with Beehive Cap	I	Energy Dissipator
E	Effluent Pipe	J	Flow Control Orifice

The media chamber was 32" from invert outlet to bypass level. The flow path for the EcoStream™ 4x4 is shown in **Figure 2**. Stormwater runoff enters the EcoStream™ 4x4 via a pipe inlet or curb inlet and flows downward via gravity flow through growth media/biofiltration media/gravel layers. The top layer provides retains the coarse sediment, trash, and debris. The fine sediment is further removed through the media bed. Treated water enters a perforated underdrain pipe (and then exits the EcoStream™ 4x4 through the effluent pipe into a stormwater system) or infiltrates into the ground (installations with open bottoms). In the test unit, a flow control orifice (J) was placed downstream of the underdrain and upstream of the bypass standpipe to ensure the system achieved the design flow rate.

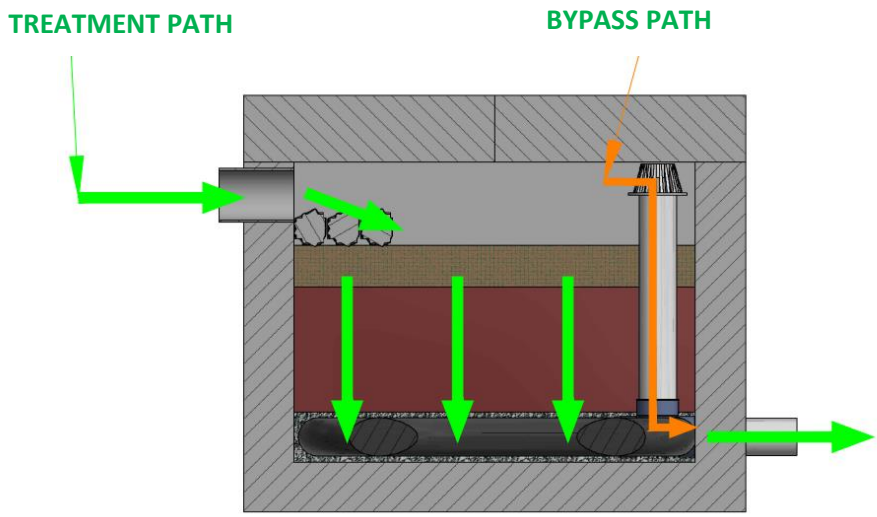

Figure 2 Flow Path of the EcoStream™

The EcoStream™ 4x4 has 16 square feet of effective filtration treatment area. The maximum treatment flow rate (MTFR) is approximately 66 gpm. The tested unit is shown in **Figure 3**.

Figure 3 Photo of the Tested EcoStream™ 4x4

2. Laboratory Testing

Beginning in November 2022, one EcoStream™ 4x4 commercial size unit was installed at the ADS Water Quality Laboratory in Mount Airy, Maryland, to evaluate the performance of the EcoStream™ on Total Suspended Solids (TSS) removal. Boggs Environmental Consultants (BEC) provided third-party review and oversight of all testing and data collection in accordance with the *New Jersey Department of Environmental Protection Laboratory Protocol to Assess Total Suspended Solids Removal by a Filtration Manufactured Treatment Device (January 14, 2022).* All sediment concentration samples were analyzed by an ISO 17025 certified laboratory (GeoTesting Express, GTE) using ASTM D3977-97 "Standard Test Methods for Determining Sediment Concentrations in Water Samples." Likewise, GTE analyzed the Particle Size Distribution (PSD) samples in accordance with method ASTM D6913-17 and ASTM D7928-17. The moisture content of the test sediment was determined by GTE in accordance with ASTM Method D2216-19. Prior to the start of testing, a Quality Assurance Project Plan (QAPP), revision dated November 14, 2022, was submitted and approved by the New Jersey Corporation for Advanced Technology (NJCAT).

2.1 Test Setup

The testing system, shown in **Figure 4**, consisted of source tanks, feed pump, flow control valve, flow meter (installed according to the manufacturer's requirements), background sample port, screw-auger sediment doser, and an EcoStream™ 4x4.

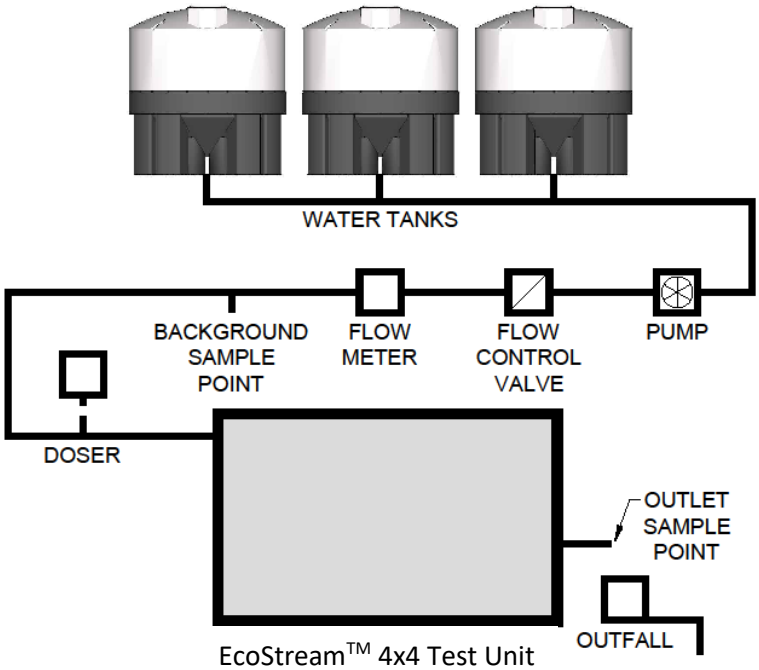

Figure 4 Schematic of the EcoStream™ 4x4 Test Configuration

Testing Procedure

The water source was potable water from the Town of Mount Airy, MD, Water & Sewer Department, obtained from an onsite tap. Municipal tap water was used to fill the source tanks, and the unheated water was then pumped to the system. Flow rate was controlled to the target of 66 gpm by a flow control valve. An inline flow meter (Seametrics IMAG4700P, pictured **in Figure 5**) measured and recorded the flow rate at one-minute intervals. Two-and-a-half feet upstream of the system inlet, sediment was introduced to the feed stream via a dosing port (pictured in **Figure 6**); the dosing rate was controlled by a screw-auger Velodyne Barracuda 500A volumetric feeder with a ½ HP variable speed motor. The dosing rate was calculated to deliver an amount of sediment that, when mixed with the water from the source tank, would produce influent water with a target test sediment concentration of 200 mg/L. The inlet and outlet pipes were both 4" in diameter. The slope of the inlet pipe was 1.92%, and the slope of the outlet pipe was 1.74%.

Figures 5 and 6 Photographs of Flow Meter and Sediment Delivery Port

Test Unit and Scaling Explanation

The EcoStream™ 4x4 tested contains the same depth of media, composition of media, and gradation of media as the smallest commercial model. The only major difference is that no established plant life was included on top of the biofiltration cell in this tested system. The effective filtration treatment area/loading rate is 4.125 gpm/ft^2, and the ratio of effective sedimentation treatment area to effective filtration treatment area is 1.0. Given these ratios, we can effectively scale the test results for all commercial systems.

Sample Collection

The grab sampling method was used for all sample collection by sweeping a wide-mouth 1-L plastic bottle through an open flowing stream, to ensure the full cross section of the flow was sampled. The start time for each run was recorded.

The sampling schedule is provided in **Table 1**. The detention time for the EcoStream™ 4x4 is 2.43 minutes. To comply with the NJDEP Filter Protocol, after initiating and stabilizing the flow rate at the MTFR and beginning sediment feed, effluent sampling did not begin until the filtration manufactured treatment device (MTD) had been in operation for a minimum of three detention times.

Background water samples were collected upstream of the doser (**Figures 4 and 7**) in correspondence with the odd-numbered effluent samples.

Figure 7 Photograph of Background Sampling Port

Two evenly-volume-spaced drawdown samples, DDA and DDB, were taken after the flow and sediment feed to the unit had been stopped.

Sediment sample rates were measured using a stopwatch and mass measurement once at the start of dosing, once in the middle of the run, and once just prior to the conclusion of dosing. The duration of each run was 31 minutes.

Table 1 Sampling Schedule for the EcoStream™ 4x4 Tests

Time (min)	Sample(s)	Time (min)	Sample(s)
0	S1	28	E5, BG3
12	E1, BG1	29	E6
13	E2	30	S3
14	E3, BG2	31	Stop Flow
15	S2	N/A	DDA
27	E4	N/A	DDB

NOTE: S = sediment rate; E = effluent; BG = background; DD = drawdown

A Chain of Custody (COC) form was used for each test run to record sampling date and time for externally analyzed samples. Copies of these forms were maintained by the ADS Water Quality Laboratory and GTE. Sample bottles were labeled to identify the test run number and sample type (e.g., background, effluent), corresponding to the sample identification on the COC form. BEC was present and witnessed labeling, completion of COC forms, and packaging of samples for shipment to the external laboratory (GTE). Each person taking or relinquishing possession of the samples was required to sign a COC form before samples changed hands.

Other Instrumentation and Measurement

Influent water temperature was recorded every minute by a HOBO data logger and did not exceed 80 degrees Fahrenheit. The water level on top of the media bed of the EcoStream™ 4x4 was recorded by BEC personnel at five-minute intervals, as well as at the start and end of each run, and when samples were collected. Run and sampling times were measured using a digital timer and a stopwatch.

2.2 Test Sediment

The test sediment had the particle size distribution (PSD) presented in **Figure 8**. The test sediment was custom-blended using various commercially available silica sands. The blend ratio of those sands was determined such that the particle size distribution of the resulting blended sediment would meet the specification for the NJDEP Filter Protocol. **Figure 8** shows the NJDEP test sediment particle size distribution plotted against the values of the test sediment blend, which was sampled under supervision by BEC and analyzed by GTE, using the methodology of ASTM D6913-17 and ASTM D7928-17.

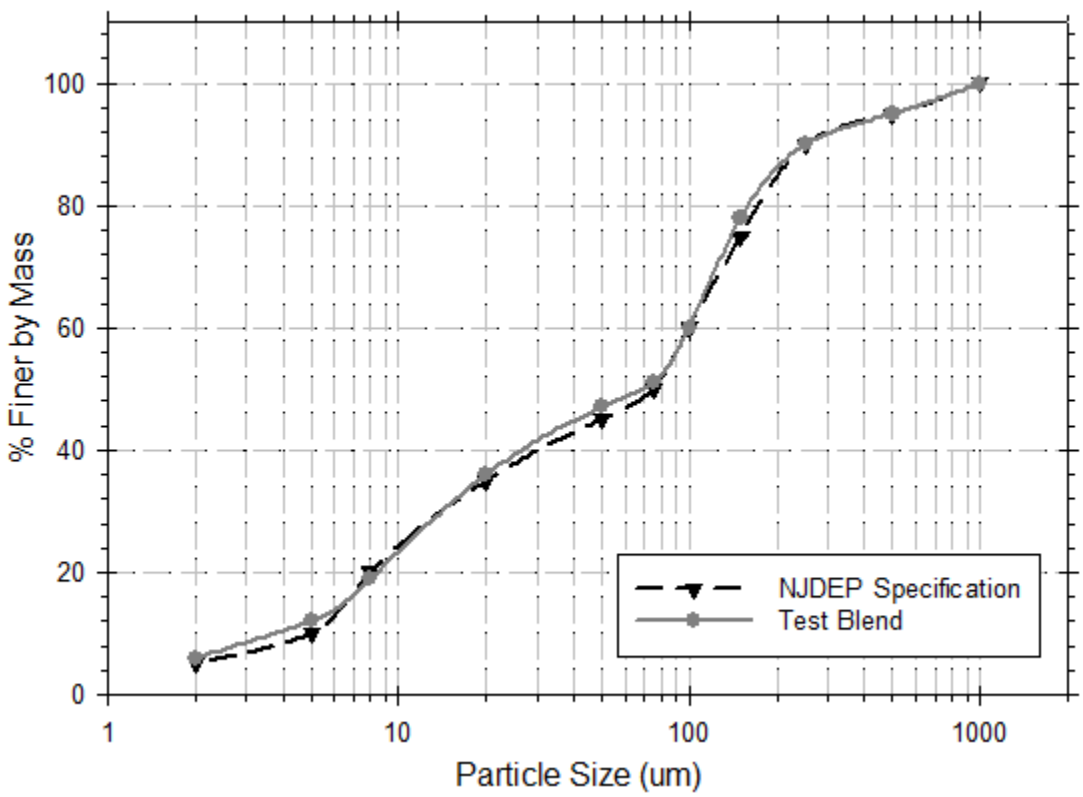

Figure 8 Average Particle Size Distribution of Test Sediment Verified by GTE

The PSD test results are also summarized in **Table 2**. GTE results showed that 18-19% of the test sediment particles were less than 8 microns (µm) and 90-91% of the test sediment particles were less than 250 microns (µm). The median particle size (d_{50}) was approximately 68 µm for this test. Thus, the blended test sediment was found to meet the NJDEP particle size specification and was acceptable for use. In addition to particle size distribution, GTE also performed the moisture analysis of the test sediment and determined the water content to be < 0.3% (the analytical method detection limit).

Table 2 Particle Size Distribution of Test Sediment as Analyzed by GTE

Particle Size (µm)	Test Blend % Finer by Mass Analyzed by GTE				
	NJ Blend A	NJ Blend B	NJ Blend C	Average	NJDEP Specification (minimum % passing)
1000	100	100	100	100	98
500	95	95	95	95	93
250	90	90	91	90	88
150	77	77	81	78	73
100	58	58	63	60	58
75	50	50	53	51	50
50	47	46	47	47	43
20	36	35	38	36	33
8	19	18	19	19	18
5	12	11	12	12	8
2	7	5	7	6	3

2.3 Sediment Removal Efficiency Testing

Sediment removal efficiency testing adhered to the guidelines set forth in Section 4 of the NJDEP Laboratory Protocol for Filtration MTDs. The target flow rate through the system was 66 gpm, with a target sediment concentration of 200 mg/L. All samples were collected in clean, 1-L wide-mouth bottles. Individual sample volumes were ≥ 500 ml. Three background samples were taken in correspondence with the odd-numbered effluent samples to ensure the tap water source met the sediment concentration requirement. According to the NJDEP Filter Protocol, these background concentrations cannot exceed a TSS of 20 mg/L.

The test sediment screw-auger feeder (doser) introduced the test sediment into the feed water stream to achieve the target influent TSS concentration of 200 mg/L. According to the NJDEP Filter Protocol, this influent concentration must stay within 10% of the target. The doser was calibrated prior to each run. In order to confirm sediment feed rates during the test, in accordance with the NJDEP Filter Protocol, three samples of the test sediment were collected from the

injection point (**Figure 4**, "Doser" and **Figure 6**) into a clean container for verification of sediment feed rate, over an interval timed to the nearest second, with a minimum volume of 0.1 liter or a collection interval not exceeding one minute (whichever came first). The time was kept with a stopwatch. The samples were weighed to the nearest milligram in house under the observation of BEC. The sediment feed rate coefficient of variance (COV) for the test sediment samples did not exceed 0.10. The mass from the sediment feed rate measurement samples was subtracted from the total mass introduced to the system when removal efficiency was calculated.

Effluent sampling was performed by the grab sampling method during each run, according to the schedule in **Table 1**. When the test sediment feed was interrupted for test sediment rate measurements, the next effluent samples were collected after at least three detention times had elapsed. During the drawdown period, two evenly-volume-spaced effluent samples were collected after flow and sediment feed had stopped. All sediment concentration samples were analyzed by GTE using the ASTM D3977-97 "Standard Test Methods for Determining Sediment Concentrations in Water Samples."

2.4 Sediment Mass Loading Capacity Testing

After Run 25, the target influent concentration was increased to 400 mg/L, and all other aspects of testing procedures were kept the same to ensure consistency throughout. The sediment mass loading capacity of the EcoStream™ 4x4 was defined as the cumulative mass loading of the unit at the end of the test run during which the maximum driving head was reached while operating at 60 gpm (90% of MTFR). In this testing program, the EcoStream™ 4x4 reached maximum driving head (6.5 inches above the media bed) at 66 gpm (100% of MTFR) during Run 61. The feed flow rate was then reduced to 60 gpm (90% of MTFR), and testing continued until the maximum driving head was reached once again (during Run 62).

2.5 Scour Testing

Scour testing was performed to demonstrate that the EcoStream™ Biofiltration System can be operated on-line. The test was performed at an average feed flow rate of 131 gpm (198% of the MTFR). In accordance with the NJDEP Filter Protocol, the average effluent concentration during the scour run must be less than 20 mg/L above the background concentration.

Scour testing was performed on a clean EcoStream™ 4x4 bed. The bed was loaded with NJ blend sediment, uniformly distributed across bed surface, in five equal increments of 33 lb. After each sediment loading, clean water was run at the MTFR (66 gpm) through the bed for up to 30 minutes. After the target amount of sediment was loaded onto the bed, the system waited approximately 22 hours before conducting the scour test.

The scour run commenced by conveying clear water through the EcoStream™ 4x4 at increasing flow rates. The flow rate was increased to the target flow rate (132 gpm) within three minutes of commencement of the test. The flow rate then remained constant at the target flow rate for the remainder of the test duration. The flow rate was recorded continuously so that the effluent samples could be compared to corresponding flow rate values. Fifteen (15) effluent samples were taken at

1, 3 and 5 minutes and then every two minutes thereafter for an additional 12 samples (i.e., 7. 9, 11…29 minutes). All 15 samples were used to determine the average effluent concentration.

Eight background samples of the clear water were collected at evenly spaced intervals throughout the duration of the scour test. All samples (background and effluent) were analyzed by GTE for TSS in accordance with ASTM D3977 "Standard Test Methods for Determining Sediment Concentrations in Water Samples." The maximum allowable background concentration in the clear water did not exceed 20 mg/L.

All effluent sample results from the scour test run were adjusted by subtracting the background concentration from the recorded effluent sample concentration.

2.6 Laboratory Proficiency Testing

Four spiked Suspended Solid Concentration (SSC) samples, two at a concentration of around 25 mg/L and two others at a concentration of around 40 mg/L were prepared by ADS using the same test sediment as for the removal performance testing overseen by BEC. These samples were submitted to GeoTesting Express (GTE), an ISO 17025 accredited laboratory in Acton, MA. Samples were analyzed by GTE for sediment concentration (SSC) in accordance with ASTM Method D 3977-97 "Standard Test Methods for Determining Sediment Concentrations in Water Samples." The results of the proficiency testing are summarized in **Table 3** below.

Table 3 GTE Proficiency Testing Results

Sample ID	Sample Concentration (mg/L)	Reported SSC	% Recovery
Spike #1	25.29	27.71	109.5
Spike #3	26.57	25.04	94.2
		Average	**101.85**
Spike #2	41.86	37.05	88.5
Spike #4	43.57	42.54	97.6
		Average	**93.05**

The average recovery percentage of the spiked SSC samples was 101.85% at ~25 mg/L and 93.05% at ~40 mg/L, meeting the protocol requirement of 85 – 115%. GTE passed the Laboratory Proficiency Testing for SSC analysis.

3. Performance Claims

Per the NJDEP verification procedure and based on the laboratory testing conducted for the EcoStream™ 4x4 Biofiltration System, the following are the performance claims made by Advanced Drainage Systems, Inc.

Total Suspended Solids (TSS) Removal Efficiency

Based on the laboratory testing conducted, the EcoStream™ 4x4 achieved 85.4% cumulative TSS removal efficiency after ten qualifying runs.

Maximum Treatment Flow Rate (MTFR)

The EcoStream™ 4x4 has an MTFR of 0.147 cfs (66 gpm) and an effective filtration treatment area (EFTA) of 16 ft^2 (loading rate = 4.125 gpm/ft^2).

Detention Time and Volume

The EcoStream™ 4x4 wet volume is 21.4 ft^3, and the detention time is about 2.43 minutes at the test flow rate of 66 gpm.

Effective Sedimentation Treatment Area

The Effective Sedimentation Treatment Area (ESTA) increases as the size of the EcoStream™ increases, with a large-scale system having a higher ESTA. Under test conditions with a single EcoStream™ 4x4, the ESTA is 16 ft^2 and the ratio ESTA/EFTA was 1.0.

Sediment Load Capacity

Based on laboratory testing results, the EcoStream™ 4x4 has a mass loading capacity of 270.8 lbs.

Maximum Allowable Inflow Drainage Area

Laboratory testing results show that 314.9 lbs of sediment can be loaded into an EcoStream™ 4x4 with internal bypass, while achieving a cumulative sediment mass removal efficiency of 86.0% (after all 62 runs). Per the NJDEP Filter Protocol, to calculate the maximum inflow drainage area, the total sediment load captured during the test (270.8 lbs) is divided by 600 lb/acre. Thus, the maximum inflow drainage area is 0.452 acres.

4. Supporting Documentation

The Procedure for Obtaining Verification of a Stormwater Manufactured Treatment Device from NJCAT states that copies of the analytical laboratory reports, all data from performance evaluation test runs, original data, pertinent calculations, and documentation of any maintenance activities that occur during the testing process are to be included in this section. All of this information can

be made available upon request to NJCAT, but it was not practical to include it in the verification report.

5. Testing Results

A total of 25 removal efficiency testing runs, and 37 mass capacity runs were completed in accordance with the NJDEP filter protocol. The target influent sediment concentrations for removal efficiency runs and mass capacity runs were 200 mg/L and 400 mg/L, respectively. The results from all removal efficiency runs were used to calculate an overall cumulative removal efficiency of the EcoStream™ 4x4 at the design flow rate of 66 gpm.

5.1 Flow Rate

Flow rate was recorded by a Seametrics IMAG4700P Flow Meter every minute during each run. For each run, the flow rate was maintained within 10% of the target flow rate (60 - 72 gpm at 100% MTFR, and 54 – 66 gpm at 90% MTFR). The average flow rate for the first 61 runs was 67.0 gpm. The average flow rate for run 62 (90% MTFR) was 60.2 gpm. The flow data with coefficient of variation (COV) values for all 62 runs are summarized in **Table 4**.

5.2 Water Temperature

Temperatures were recorded every minute by a HOBO water level logger (U20L-04). The average water temperature for all 62 runs was 58 degrees Fahrenheit, with a maximum of 65.5 degrees Fahrenheit, meeting the NJDEP Filter Protocol requirement to be below 80 degrees Fahrenheit. Data are summarized in **Table 4**.

Table 4 Flow Rate and Temperature Summary

Run #	Max Flow (gpm)	Min Flow (gpm)	Average Flow (gpm)	Flow COV	Flow Compliance (COV ≤ 0.1)	Maximum Temperature (Fahrenheit)	NJDEP Temperature Compliance (≤ 80 F)
1	69.87	54.93	65.62	0.0435	N	58.8	Y
2	67.20	66.13	66.73	0.0035	Y	57.1	Y
3	67.47	65.60	66.77	0.0055	Y	58.0	Y
4	68.00	65.87	66.97	0.0068	Y	59.2	Y
5	67.73	66.13	67.07	0.0054	Y	58.5	Y
6	67.20	66.40	66.94	0.0036	Y	59.2	Y
7	67.47	66.13	66.78	0.0049	Y	58.3	Y
8	68.00	66.13	67.04	0.0064	Y	65.5	Y
9	67.47	66.13	66.97	0.0048	Y	58.0	Y
10	67.47	66.13	66.92	0.0051	Y	59.2	Y
11	67.20	66.40	67.03	0.0032	Y	58.0	Y
12	67.47	66.13	67.01	0.0047	Y	61.7	Y
13	67.20	66.13	66.87	0.0046	Y	57.8	Y
14	67.20	66.13	66.98	0.0040	Y	62.9	Y
15	67.47	66.13	66.94	0.0057	Y	57.6	Y
16	67.73	66.40	66.89	0.0052	Y	63.5	Y
17	67.20	66.67	67.06	0.0027	Y	57.3	Y
18	67.73	66.40	67.08	0.0044	Y	64.1	Y
19	67.47	66.13	67.13	0.0045	Y	57.4	Y
20	67.73	66.67	67.35	0.0040	Y	64.7	Y
21	67.47	66.13	67.13	0.0052	Y	57.4	Y
22	67.73	66.40	67.18	0.0040	Y	64.7	Y
23	67.20	66.67	67.07	0.0028	Y	56.6	Y
24	68.00	66.40	67.22	0.0050	Y	57.8	Y
25	67.47	66.67	67.28	0.0029	Y	56.9	Y
26	67.73	66.40	67.32	0.0048	Y	58.5	Y
27	67.47	66.67	67.14	0.0031	Y	56.4	Y
28	67.73	66.67	67.28	0.0041	Y	59.9	Y
29	67.73	66.67	67.44	0.0037	Y	56.9	Y
30	67.73	66.13	67.18	0.0045	Y	59.7	Y
31	67.73	66.40	67.29	0.0059	Y	57.1	Y

Table 4 Flow Rate and Temperature Summary (continued)

Run #	Max Flow (gpm)	Min Flow (gpm)	Average Flow (gpm)	Flow COV	Flow Compliance (COV ≤ 0.1)	Maximum Temperature (Fahrenheit)	NJDEP Temperature Compliance (≤ 80 F)
32	68.00	65.07	66.60	0.0118	Y	60.2	Y
33	67.73	65.87	66.91	0.0079	Y	57.1	Y
34	68.00	66.40	67.05	0.0055	Y	59.3	Y
35	67.20	66.13	66.79	0.0040	Y	56.2	Y
36	67.73	66.40	67.17	0.0044	Y	56.4	Y
37	68.27	66.67	67.41	0.0066	Y	60.0	Y
38	68.00	67.20	67.70	0.0029	Y	56.1	Y
39	68.00	65.87	67.23	0.0083	Y	56.1	Y
40	68.27	67.47	67.97	0.0030	Y	62.9	Y
41	68.00	66.93	67.53	0.0036	Y	54.8	Y
42	68.00	66.93	67.67	0.0037	Y	56.2	Y
43	68.00	66.67	67.56	0.0053	Y	55.4	Y
44	68.53	66.93	67.77	0.0052	Y	61.9	Y
45	67.73	66.40	67.47	0.0049	Y	53.8	Y
46	67.20	66.40	67.01	0.0038	Y	54.3	Y
47	68.51	67.45	67.94	0.0042	Y	59.2	Y
48	68.25	67.18	67.85	0.0037	Y	54.5	Y
49	67.98	66.65	67.37	0.0039	Y	54.5	Y
50	68.53	66.67	67.77	0.0059	Y	60.4	Y
51	68.00	66.93	67.79	0.0042	Y	54.5	Y
52	68.00	65.60	67.18	0.0081	Y	55.2	Y
53	67.73	66.67	67.41	0.0040	Y	55.7	Y
54	68.27	66.93	67.74	0.0048	Y	61.1	Y
55	68.00	64.27	67.49	0.0094	Y	52.8	Y
56	67.73	66.67	67.42	0.0042	Y	53.1	Y
57	67.47	64.27	65.95	0.0145	Y	53.4	Y
58	65.07	64.00	64.72	0.0051	Y	58.0	Y
59	65.87	63.20	64.12	0.0121	Y	54.5	Y
60	65.60	63.47	64.64	0.0116	Y	58.5	Y
61	65.33	63.47	64.82	0.0073	Y	58.5	Y
62	61.60	57.33	60.17	0.0173	Y	53.4	Y

5.3 Head

The water surface level on top of the media bed was recorded by BEC personnel at five-minute intervals, as well as at the start and end of each run, and when samples were collected. The water surface level remained constant at 0.125 inches for the first 54 runs. Then, with each subsequent run, the water surface level increased slightly, until reaching the maximum (6.5 inches) in Run 61. Beginning with Run 62, the flow rate was reduced to 90% MTFR (60 gpm). The water surface level then reached the maximum during that run. Maximum head for each run is summarized in **Table 5**.

Table 5 Maximum Head

Run #	Maximum Water Surface Level (inches)	Run #	Maximum Water Surface Level (inches)	Run #	Maximum Water Surface Level (inches)
1	0.125	22	0.125	43	0.125
2	0.125	23	0.125	44	0.125
3	0.125	24	0.125	45	0.125
4	0.125	25	0.125	46	0.125
5	0.125	26	0.125	47	0.125
6	0.125	27	0.125	48	0.125
7	0.125	28	0.125	49	0.125
8	0.125	29	0.125	50	0.125
9	0.125	30	0.125	51	0.125
10	0.125	31	0.125	52	0.125
11	0.125	32	0.125	53	0.125
12	0.125	33	0.125	54	0.125
13	0.125	34	0.125	55	0.750
14	0.125	35	0.125	56	0.875
15	0.125	36	0.125	57	3.250
16	0.125	37	0.125	58	0.375
17	0.125	38	0.125	59	5.500
18	0.125	39	0.125	60	5.750
19	0.125	40	0.125	61	6.500
20	0.125	41	0.125	62	6.500
21	0.125	42	0.125		

5.4 Sediment Concentration and Removal Efficiency

Background TSS

Municipal tap water was used as the water source during testing. Overall, the average background TSS concentration was 0.3 mg/L, which is far below the 20 mg/L NJDEP Protocol limit. Background TSS concentrations for each run are provided in **Table 6**. The average background TSS value for each run was subtracted from effluent and drawdown TSS values to provide adjusted figures, per the protocol.

Table 6 Background TSS Concentrations

Run #	Background TSS (mg/L)	NJDEP Background TSS Compliance (≤ 20 mg/L)	Run #	Background TSS (mg/L)	NJDEP Background TSS Compliance (≤ 20 mg/L)	Run #	Background TSS (mg/L)	NJDEP Background TSS Compliance (≤ 20 mg/L)
1	0.1	Y	22	0.2	Y	43	0.8	Y
2	0.1	Y	23	0.1	Y	44	0.1	Y
3	0.1	Y	24	0.1	Y	45	0.5	Y
4	0.1	Y	25	0.1	Y	46	0.8	Y
5	0.4	Y	26	0.4	Y	47	0.1	Y
6	0.2	Y	27	0.8	Y	48	0.4	Y
7	0.2	Y	28	0.4	Y	49	0.3	Y
8	0.1	Y	29	0.5	Y	50	0.2	Y
9	0.1	Y	30	0.4	Y	51	0.1	Y
10	0.2	Y	31	0.1	Y	52	0.1	Y
11	0.5	Y	32	0.1	Y	53	0.3	Y
12	0.1	Y	33	0.2	Y	54	0.3	Y
13	0.2	Y	34	0.3	Y	55	0.1	Y
14	0.1	Y	35	0.7	Y	56	0.6	Y
15	0.1	Y	36	0.9	Y	57	0.8	Y
16	0.1	Y	37	0.5	Y	58	0.1	Y
17	0.1	Y	38	0.5	Y	59	0.1	Y
18	0.1	Y	39	0.9	Y	60	0.4	Y
19	0.1	Y	40	0.3	Y	61	0.1	Y
20	0.1	Y	41	0.1	Y	62	0.1	Y
21	0.2	Y	42	1.0	Y			
Mean Background TSS (mg/L)							**0.3**	**Y**

MDL = 0.2 mg/L; In cases of non-detect, a value equal to ½ the MDL (0.1 mg/L) was used.

Sediment Dosing Rate and Influent TSS

Influent TSS concentration was calculated by dividing the total mass of sediment added during a given run by the total volume of water flowing through the MTD during the addition of test sediment during that run. The volume of water flowing through the device during the run was calculated by multiplying the average feed flow rate by the time of sediment addition only. All values are within the target range of 200 ± 20 mg/L for removal efficiency runs and 400 ± 40 mg/L for mass capacity runs. **Table 7** provides the measured sediment rates for each run, and the resulting calculated influent TSS concentration. In this table, NJDEP Protocol compliance is defined as a TSS concentration in the range 180 – 200 mg/L or 360 – 440 mg/L and COV ≤0.1.

Table 7 Sediment Feed Rate Measurements

Run	Run Time (min)	Sediment Weight (g)	Duration (s)	Sediment Feed Rate (g/min)	Influent Water Flow Rate (gpm)	Influent TSS Conc. Based on Average Sediment Rate (mg/L)	NJDEP Compliance
1	1	48.902	60	48.9	65.6	189.5	Y
	2	47.247	60	47.2			
	3	45.128	60	45.1			
	COV			0.040			
2	1	51.922	60	51.9	66.7	197.9	Y
	2	48.228	60	48.2			
	3	49.918	60	49.9			
	COV			0.037			
3	1	51.034	60	51.0	66.8	198.5	Y
	2	48.169	60	48.2			
	3	51.251	60	51.3			
	COV			0.034			
4	1	53.634	60	53.6	67.0	208.9	Y
	2	51.871	60	51.9			
	3	53.396	60	53.4			
	COV			0.018			
5	1	51.433	60	51.4	67.1	204.7	Y
	2	51.947	60	51.9			
	3	52.612	60	52.6			
	COV			0.012			
6	1	51.587	60	51.6	66.9	203.8	Y
	2	49.495	60	49.5			
	3	53.819	60	53.8			
	COV			0.042			
7	1	52.929	60	52.9	66.8	202.5	Y
	2	49.502	60	49.5			
	3	51.178	60	51.2			
	COV			0.033			
8	1	48.858	60	48.9	67.0	199.5	Y
	2	50.300	60	50.3			
	3	52.729	60	52.7			
	COV			0.038			
9	1	51.982	60	52.0	67.0	202.1	Y
	2	51.086	60	51.1			
	3	50.625	60	50.6			
	COV			0.014			
10	1	50.771	60	50.8	66.9	199.4	Y
	2	50.119	60	50.1			
	3	50.649	60	50.6			
	COV			0.007			

Table 7 Sediment Feed Rate Measurements (continued)

Run	Run Time (min)	Sediment Weight (g)	Duration (s)	Sediment Feed Rate (g/min)	Influent Water Flow Rate (gpm)	Influent TSS Conc. Based on Average Sediment Rate (mg/L)	NJDEP Compliance
11	1	49.756	60	49.8	67.0	207.7	Y
	2	53.428	60	53.4			
	3	54.867	60	54.9			
	COV			0.050			
12	1	54.098	60	54.1	67.0	207.9	Y
	2	52.072	60	52.1			
	3	51.968	60	52.0			
	COV			0.022			
13	1	52.339	60	52.3	66.9	205.3	Y
	2	51.166	60	51.2			
	3	52.374	60	52.4			
	COV			0.013			
14	1	50.025	60	50.0	67.0	199.4	Y
	2	51.510	60	51.5			
	3	50.185	60	50.2			
	COV			0.016			
15	1	50.343	60	50.3	66.9	209.9	Y
	2	54.295	60	54.3			
	3	55.027	60	55.0			
	COV			0.048			
16	1	48.406	60	48.4	66.9	191.7	Y
	2	49.265	60	49.3			
	3	47.933	60	47.9			
	COV			0.015			
17	1	50.801	60	50.8	67.1	197.5	Y
	2	48.591	60	48.6			
	3	50.970	60	51.0			
	COV			0.027			
18	1	51.679	60	51.7	67.1	194.8	Y
	2	48.019	60	48.0			
	3	48.696	60	48.7			
	COV			0.040			
19	1	53.669	60	53.7	67.1	201.3	Y
	2	48.272	60	48.3			
	3	51.508	60	51.5			
	COV			0.053			
20	1	54.708	60	54.7	67.4	209.6	Y
	2	53.304	60	53.3			
	3	53.336	60	53.3			
	COV			0.015			

Table 7 Sediment Feed Rate Measurements (continued)

Run	Run Time (min)	Sediment Weight (g)	Duration (s)	Sediment Feed Rate (g/min)	Influent Water Flow Rate (gpm)	Influent TSS Conc. Based on Average Sediment Rate (mg/L)	NJDEP Compliance
21	1	49.301	60	49.3	67.1	204.0	Y
	2	52.562	60	52.6			
	3	53.639	60	53.6			
	COV			0.043			
22	1	51.536	60	51.5	67.2	197.7	Y
	2	50.319	60	50.3			
	3	49.043	60	49.0			
	COV			0.025			
23	1	51.196	60	51.2	67.1	206.5	Y
	2	52.131	60	52.1			
	3	53.962	60	54.0			
	COV			0.027			
24	1	51.316	60	51.3	67.2	192.1	Y
	2	47.766	60	47.8			
	3	47.478	60	47.5			
	COV			0.043			
25	1	51.055	60	51.1	67.3	198.2	Y
	2	48.514	60	48.5			
	3	51.810	60	51.8			
	COV			0.034			
26	1	105.580	60	105.6	67.3	423.2	Y
	2	108.682	60	108.7			
	3	109.213	60	109.2			
	COV			0.018			
27	1	105.260	60	105.3	67.1	408.9	Y
	2	101.593	60	101.6			
	3	104.914	60	104.9			
	COV			0.020			
28	1	103.096	60	103.1	67.3	396.0	Y
	2	100.606	60	100.6			
	3	98.908	60	98.9			
	COV			0.021			
29	1	99.962	60	100.0	67.4	403.4	Y
	2	105.489	60	105.5			
	3	103.489	60	103.5			
	COV			0.027			
30	1	100.399	60	100.4	67.2	402.8	Y
	2	104.961	60	105.0			
	3	104.608	60	104.6			
	COV			0.025			

Table 7 Sediment Feed Rate Measurements (continued)

Run	Run Time (min)	Sediment Weight (g)	Duration (s)	Sediment Feed Rate (g/min)	Influent Water Flow Rate (gpm)	Influent TSS Conc. Based on Average Sediment Rate (mg/L)	NJDEP Compliance
31	1	100.712	60	100.7	67.3	404.9	Y
	2	102.923	60	102.9			
	3	105.801	60	105.8			
	COV			0.025			
32	1	90.361	60	90.4	66.6	384.0	Y
	2	97.444	60	97.4			
	3	102.584	60	102.6			
	COV			0.063			
33	1	101.769	60	101.8	66.9	397.8	Y
	2	97.753	60	97.8			
	3	102.691	60	102.7			
	COV			0.026			
34	1	98.803	60	98.8	67.0	396.8	Y
	2	100.499	60	100.5			
	3	102.834	60	102.8			
	COV			0.020			
35	1	97.591	60	97.6	66.8	387.9	Y
	2	96.730	60	96.7			
	3	99.908	60	99.9			
	COV			0.017			
36	1	99.254	60	99.3	67.2	401.9	Y
	2	106.264	60	106.3			
	3	100.979	60	101.0			
	COV			0.036			
37	1	99.231	60	99.2	67.4	390.8	Y
	2	99.696	60	99.7			
	3	100.341	60	100.3			
	COV			0.006			
38	1	109.133	60	109.1	67.7	413.8	Y
	2	105.124	60	105.1			
	3	103.923	60	103.9			
	COV			0.026			
39	1	105.079	60	105.1	67.2	416.0	Y
	2	103.436	60	103.4			
	3	109.067	60	109.1			
	COV			0.028			
40	1	99.026	60	99.0	68.0	398.2	Y
	2	104.477	60	104.5			
	3	103.003	60	103.0			
	COV			0.028			

Table 7 Sediment Feed Rate Measurements (continued)

Run	Run Time (min)	Sediment Weight (g)	Duration (s)	Sediment Feed Rate (g/min)	Influent Water Flow Rate (gpm)	Influent TSS Conc. Based on Average Sediment Rate (mg/L)	NJDEP Compliance
41	1	103.299	60	103.3	67.5	399.8	Y
	2	101.898	60	101.9			
	3	101.407	60	101.4			
	COV			0.010			
42	1	106.357	60	106.4	67.7	414.0	Y
	2	106.226	60	106.2			
	3	105.472	60	105.5			
	COV			0.004			
43	1	105.931	60	105.9	67.6	415.4	Y
	2	106.333	60	106.3			
	3	106.522	60	106.5			
	COV			0.003			
44	1	102.157	60	102.2	67.8	395.1	Y
	2	101.200	60	101.2			
	3	100.715	60	100.7			
	COV			0.008			
45	1	100.602	60	100.6	67.5	406.5	Y
	2	106.915	60	106.9			
	3	104.005	60	104.0			
	COV			0.030			
46	1	101.621	60	101.6	67.0	413.2	Y
	2	105.121	60	105.1			
	3	107.696	60	107.7			
	COV			0.029			
47	1	102.082	60	102.1	67.9	406.9	Y
	2	106.377	60	106.4			
	3	105.430	60	105.4			
	COV			0.022			
48	1	102.626	60	102.6	67.8	405.7	Y
	2	101.420	60	101.4			
	3	108.560	60	108.6			
	COV			0.037			
49	1	105.342	60	105.3	67.4	413.4	Y
	2	103.119	60	103.1			
	3	107.931	60	107.9			
	COV			0.023			
50	1	99.366	60	99.4	67.8	393.4	Y
	2	101.705	60	101.7			
	3	101.682	60	101.7			
	COV			0.013			

Table 7 Sediment Feed Rate Measurements (continued)

Run	Run Time (min)	Sediment Weight (g)	Duration (s)	Sediment Feed Rate (g/min)	Influent Water Flow Rate (gpm)	Influent TSS Conc. Based on Average Sediment Rate (mg/L)	NJDEP Compliance
51	1	105.053	60	105.1	67.8	407.0	Y
	2	106.545	60	106.5			
	3	101.709	60	101.7			
	COV			0.024			
52	1	98.644	60	98.6	67.2	399.8	Y
	2	104.176	60	104.2			
	3	102.231	60	102.2			
	COV			0.028			
53	1	104.346	60	104.3	67.4	405.6	Y
	2	102.049	60	102.0			
	3	104.224	60	104.2			
	COV			0.013			
54	1	99.581	60	99.6	67.7	388.0	Y
	2	99.303	60	99.3			
	3	99.581	60	99.6			
	COV			0.002			
55	1	100.804	60	100.8	67.5	407.5	Y
	2	105.434	60	105.4			
	3	106.051	60	106.1			
	COV			0.028			
56	1	102.585	60	102.6	67.4	408.3	Y
	2	103.383	60	103.4			
	3	106.629	60	106.6			
	COV			0.020			
57	1	105.599	60	105.6	66.0	423.8	Y
	2	105.982	60	106.0			
	3	105.774	60	105.8			
	COV			0.002			
58	1	96.916	60	96.9	64.7	403.7	Y
	2	97.261	60	97.3			
	3	102.503	60	102.5			
	COV			0.032			
59	1	106.825	60	106.8	64.1	438.1	Y
	2	105.035	60	105.0			
	3	107.234	60	107.2			
	COV			0.011			
60	1	102.238	60	102.2	64.6	412.8	Y
	2	99.479	60	99.5			
	3	101.332	60	101.3			
	COV			0.014			

Table 7 Sediment Feed Rate Measurements (continued)

Run	Run Time (min)	Sediment Weight (g)	Duration (s)	Sediment Feed Rate (g/min)	Influent Water Flow Rate (gpm)	Influent TSS Conc. Based on Average Sediment Rate (mg/L)	NJDEP Compliance
61	1	98.907	60	98.9	64.8	413.7	Y
	2	103.468	60	103.5			
	3	102.088	60	102.1			
	COV			0.023			
62	1	92.324	60	92.3	60.2	403.6	Y
	2	88.902	60	88.9			
	3	94.570	60	94.6			
	COV			0.031			

At the end of each run, the sediment remaining in the inlet pipe after the sediment injection point was collected, dried, and weighed. This quantity was very small, ranging from 0.017 to 4.8 g (0.00004 to 0.011 lb), as shown in **Table 8**. This quantity was subtracted from the mass fed to the flow when calculating the average influent concentration.

Table 8 Sediment Mass Recovered from Inlet Pipe

Run #	Sediment Recovered from Inlet Pipe (g)	Sediment Recovered from Inlet Pipe (lb)	Run #	Sediment Recovered from Inlet Pipe (g)	Sediment Recovered from Inlet Pipe (lb)	Run #	Sediment Recovered from Inlet Pipe (g)	Sediment Recovered from Inlet Pipe (lb)
1	0.199	0.00044	22	0.164	0.00036	43	1.066	0.00235
2	0.168	0.00037	23	0.123	0.00027	44	0.696	0.00153
3	0.156	0.00034	24	0.055	0.00012	45	0.196	0.00043
4	0.163	0.00036	25	0.076	0.00017	46	0.399	0.00088
5	0.158	0.00035	26	0.040	0.00009	47	0.177	0.00039
6	0.115	0.00025	27	0.442	0.00097	48	0.168	0.00037
7	0.053	0.00012	28	0.024	0.00005	49	0.106	0.00023
8	0.056	0.00012	29	0.567	0.00125	50	3.576	0.00788
9	0.017	0.00004	30	0.084	0.00019	51	1.888	0.00416
10	0.022	0.00005	31	0.160	0.00035	52	0.753	0.00166
11	0.090	0.00020	32	0.205	0.00045	53	1.730	0.00381
12	0.074	0.00016	33	0.149	0.00033	54	2.118	0.00467
13	0.072	0.00016	34	0.360	0.00079	55	3.432	0.00757
14	0.017	0.00004	35	0.416	0.00092	56	2.322	0.00512
15	0.122	0.00027	36	0.471	0.00104	57	3.646	0.00804
16	0.034	0.00008	37	0.132	0.00029	58	2.169	0.00478
17	0.063	0.00014	38	0.236	0.00052	59	3.342	0.00737
18	0.052	0.00012	39	0.811	0.00179	60	2.596	0.00572
19	0.092	0.00020	40	0.427	0.00094	61	4.833	0.01065
20	0.055	0.00012	41	0.269	0.00059	62	3.199	0.00705
21	0.060	0.00013	42	0.197	0.00043			

Effluent TSS

During each run, grab samples were taken of the effluent according to the schedule in **Table 1**, and all TSS analysis was conducted by GTE. For each run, the average effluent concentration was adjusted by subtracting the average background TSS concentration. The average adjusted effluent TSS concentration during testing was 28 mg/L for all the removal efficiency runs, with individual run averages ranging from 25 to 35 mg/L. Adjusted effluent TSS concentrations for each run are given in **Table 10**.

Drawdown TSS

According to the NJDEP Filter Protocol, the amount of sediment that leaves the filter during the drawdown period must be accounted for and documented. For each run, two evenly-volume-spaced grab samples were taken of the effluent during drawdown, and all TSS analysis was conducted by GTE. For each run, the average drawdown concentration was adjusted by subtracting the average background TSS concentration. The average adjusted drawdown TSS was 34 mg/L for removal efficiency runs, with individual run averages ranging from 18 to 51 mg/L. Adjusted average drawdown TSS concentrations are given in **Table 9**.

A summary of the calculations of the sediment delivered to the system is given in **Table 10**.

Table 9 Removal Efficiency Drawdown Losses

Run #	Head Level at End of Run (in)	Drawdown Volume (gal)	Average Adjusted Drawdown TSS Conc. (mg/L)	Total Sediment Lost During Drawdown (g)	Run #	Head Level at End of Run (in)	Drawdown Volume (gal)	Average Adjusted Drawdown TSS Conc. (mg/L)	Total Sediment Lost During Drawdown (g)
1	0.125	99.2	43.3	16.3	32	0.125	99.2	39.2	14.7
2	0.125	99.2	33.8	12.7	33	0.125	99.2	32.9	12.4
3	0.125	99.2	43.7	16.4	34	0.125	99.2	39.6	14.9
4	0.125	99.2	27.0	10.1	35	0.125	99.2	45.1	16.9
5	0.125	99.2	32.7	12.3	36	0.125	99.2	60.6	22.8
6	0.125	99.2	50.3	18.9	37	0.125	99.2	57.2	21.5
7	0.125	99.2	37.9	14.2	38	0.125	99.2	41.5	15.6
8	0.125	99.2	39.5	14.8	39	0.125	99.2	46.9	17.6
9	0.125	99.2	38.3	14.4	40	0.125	99.2	55.5	20.9
10	0.125	99.2	29.5	11.1	41	0.125	99.2	52.2	19.6
11	0.125	99.2	41.2	15.5	42	0.125	99.2	64.9	24.4
12	0.125	99.2	40.5	15.2	43	0.125	99.2	64.5	24.2
13	0.125	99.2	36.7	13.8	44	0.125	99.2	56.3	21.1
14	0.125	99.2	41.8	15.7	45	0.125	99.2	47.6	17.9
15	0.125	99.2	34.6	13.0	46	0.125	99.2	55.6	20.9
16	0.125	99.2	36.5	13.7	47	0.125	99.2	53.7	20.2
17	0.125	99.2	33.7	12.6	48	0.125	99.2	45.0	16.9
18	0.125	99.2	27.1	10.2	49	0.125	99.2	50.2	18.9
19	0.125	99.2	30.0	11.3	50	0.125	99.2	42.6	16.0
20	0.125	99.2	26.6	10.0	51	0.125	99.2	45.3	17.0
21	0.125	99.2	25.1	9.4	52	0.125	99.2	30.1	11.3
22	0.125	99.2	27.4	10.3	53	0.125	99.2	44.3	16.6
23	0.125	99.2	20.8	7.8	54	0.125	99.2	40.6	15.3
24	0.125	99.2	20.6	7.7	55	0.750	105.5	39.7	15.8
25	0.125	99.2	17.9	6.7	56	0.875	105.5	44.0	17.6
26	0.125	99.2	34.5	13.0	57	3.250	130.4	30.1	14.8
27	0.125	99.2	29.8	11.2	58	0.375	100.5	43.9	16.7
28	0.125	99.2	36.1	13.6	59	5.500	152.9	34.1	19.8
29	0.125	99.2	36.1	13.5	60	5.750	154.1	35.0	20.4
30	0.125	99.2	37.4	14.1	61	6.500	160.3	40.9	24.9
31	0.125	99.2	35.7	13.4	62	6.500	160.3	38.5	23.4

Table 10 Sediment Mass Delivered Summary

Run #	Mass From Scale	Mass Sampled	Sediment Recovered from Inlet Pipe	Mass Delivered to System	Cum. Mass Delivered to System	Run #	Mass From Scale	Mass Sampled	Sediment Recovered from Inlet Pipe	Mass Delivered to System	Cum. Mass Delivered to System
	(lb)	(lb)	(lb)	(lb)	(lb)		(lb)	(lb)	(lb)	(lb)	(lb)
1	3.294	0.311	4.4E-04	2.982	2.435	32	6.908	0.640	4.5E-04	6.267	106.186
2	3.332	0.331	3.7E-04	3.001	4.990	33	6.962	0.666	3.3E-04	6.295	111.687
3	3.449	0.332	3.4E-04	3.117	7.630	34	6.938	0.666	7.9E-04	6.271	117.074
4	3.596	0.350	3.6E-04	3.245	10.399	35	6.992	0.649	9.2E-04	6.342	122.715
5	3.620	0.344	3.5E-04	3.276	13.191	36	6.990	0.676	1.0E-03	6.313	128.401
6	3.424	0.341	2.5E-04	3.082	15.847	37	6.890	0.660	2.9E-04	6.230	133.594
7	3.448	0.339	1.2E-04	3.109	18.510	38	7.210	0.701	5.2E-04	6.508	139.169
8	3.402	0.335	1.2E-04	3.067	21.111	39	7.286	0.700	1.8E-03	6.584	144.975
9	3.474	0.339	3.7E-05	3.135	23.806	40	7.002	0.676	9.4E-04	6.325	150.347
10	3.470	0.334	4.8E-05	3.136	26.506	41	7.134	0.676	5.9E-04	6.457	156.039
11	3.654	0.348	2.0E-04	3.305	29.328	42	7.232	0.701	4.3E-04	6.530	161.882
12	3.610	0.349	1.6E-04	3.261	32.100	43	7.116	0.703	2.3E-03	6.411	167.543
13	3.554	0.344	1.6E-04	3.210	34.877	44	7.002	0.670	1.5E-03	6.330	172.837
14	3.442	0.334	3.7E-05	3.107	37.546	45	7.124	0.687	4.3E-04	6.437	178.357
15	3.606	0.352	2.7E-04	3.254	40.364	46	7.236	0.693	8.8E-04	6.542	184.124
16	3.418	0.321	7.6E-05	3.097	43.049	47	7.196	0.692	3.9E-04	6.504	189.644
17	3.422	0.331	1.4E-04	3.090	45.720	48	7.098	0.689	3.7E-04	6.408	195.166
18	3.348	0.327	1.2E-04	3.021	48.330	49	7.302	0.698	2.3E-04	6.604	200.833
19	3.580	0.338	2.0E-04	3.242	51.147	50	6.988	0.667	7.9E-03	6.313	206.154
20	3.654	0.356	1.2E-04	3.298	54.005	51	7.130	0.691	4.2E-03	6.435	211.618
21	3.556	0.343	1.3E-04	3.213	56.823	52	7.140	0.673	1.7E-03	6.466	217.185
22	3.438	0.333	3.6E-04	3.105	59.508	53	7.120	0.685	3.8E-03	6.431	222.725
23	3.564	0.347	2.7E-04	3.217	62.319	54	7.030	0.658	4.7E-03	6.367	228.106
24	3.362	0.323	1.2E-04	3.039	64.961	55	7.122	0.688	7.6E-03	6.426	233.577
25	3.538	0.334	1.7E-04	3.204	67.765	56	7.136	0.689	5.1E-03	6.442	239.346
26	7.390	0.713	8.9E-05	6.677	73.502	57	7.214	0.700	8.0E-03	6.506	245.152
27	7.174	0.687	9.7E-04	6.486	79.121	58	6.882	0.654	4.8E-03	6.223	250.476
28	6.921	0.667	5.4E-05	6.254	84.440	59	7.050	0.703	7.4E-03	6.339	255.867
29	7.108	0.681	1.3E-03	6.426	89.930	60	6.896	0.668	5.7E-03	6.222	261.082
30	7.056	0.683	1.9E-04	6.372	95.332	61	6.910	0.671	1.1E-02	6.228	266.130
31	7.092	0.682	3.5E-04	6.409	100.817	62	6.334	0.608	7.1E-03	5.719	270.840

Removal Efficiency Calculation

Removal efficiency was calculated using the following equation from the NJDEP Filter Protocol:

$$\text{Removal Efficiency (\%)} = \frac{\begin{pmatrix}\text{Average Influent}\\ \text{TSS Concentration x}\\ \text{Total Volume}\\ \text{of Test Water}\end{pmatrix} - \begin{pmatrix}\text{Adjusted Eflluent}\\ \text{TSS Concentration x}\\ \text{Total Volume}\\ \text{of Effluent Water}\end{pmatrix} - \begin{pmatrix}\text{Average}\\ \text{Drawdown Flow}\\ \text{TSS Concentration x}\\ \text{Total Volume}\\ \text{of Drawdown Water}\end{pmatrix}}{\text{Average Effluent TSS Concentration x Total Volume of Test Water}} \text{ x } 100$$

For each run, sediment concentrations of background, influent, effluent, and drawdown, as well as calculated removal efficiency, are summarized in **Table 11**. Three runs were excluded from the removal efficiency calculations. During Run 1, the influent water flow line experienced a momentary introduction of air, causing the measured influent water flow rate to drop below the allowable range. One effluent sample each from Runs 4 and 6 were broken in transit to GTE. Therefore, results from these three runs were excluded from the cumulative removal efficiency calculation. As shown in **Table 11**, the EcoStream^{TM} 4x4 demonstrated a cumulative sediment removal efficiency after ten qualifying runs (i.e., after Run 13) of 85.4%. No removal efficiencies below 80% were experienced.

Table 11 Removal Efficiency and Mass Loading Capacity Results

Run #	Average Influent TSS (mg/L)	Influent Water Volume (gal)	Adjusted Average Effluent TSS (mg/L)	Effluent Water Volume (gal)	Adjusted Average Drain Down TSS (mg/L)	Drain Down Water Volume (gal)	Sediment Mass Delivered to System (lb)	Mass of Captured Sediment (lb)	Single Run Removal Efficiency (%)	Cumulative Removal Efficiency (%)
1	194.5	1837	35.2	1738	43.3	99	2.98	2.44	81.7	
2	192.5	1869	28.3	1769	33.8	99	3.00	2.55	85.1	85.1
3	199.8	1870	29.8	1770	43.7	99	3.12	2.64	84.7	84.9
4	207.4	1875	30.7	1776	27.0	99	3.25	2.77	85.3	
5	209.0	1878	30.7	1779	32.7	99	3.28	2.79	85.3	85.0
6	197.1	1874	26.0	1775	50.3	99	3.08	2.66	86.2	
7	199.3	1870	28.1	1771	37.9	99	3.11	2.66	85.6	85.2
8	195.8	1877	29.2	1778	39.5	99	3.07	2.60	84.8	85.1
9	200.3	1875	27.5	1776	38.3	99	3.14	2.70	86.0	85.3
10	200.6	1874	27.8	1774	29.5	99	3.14	2.70	86.1	85.4
11	211.0	1877	30.2	1778	41.2	99	3.31	2.82	85.4	85.4
12	208.3	1876	30.8	1777	40.5	99	3.26	2.77	85.0	85.3
13	205.5	1872	27.2	1773	36.7	99	3.21	2.78	86.5	**85.4**
14	198.5	1875	27.2	1776	41.8	99	3.11	2.67	85.9	85.5
15	208.0	1874	27.4	1775	34.6	99	3.25	2.82	86.6	85.6
16	198.1	1873	25.8	1774	36.5	99	3.10	2.68	86.7	85.7
17	197.2	1878	26.4	1778	33.7	99	3.09	2.67	86.4	85.7
18	192.7	1878	26.2	1779	27.1	99	3.02	2.61	86.4	85.8
19	206.7	1880	26.9	1780	30.0	99	3.24	2.82	86.9	85.8
20	209.6	1886	28.1	1787	26.6	99	3.30	2.86	86.7	85.9
21	204.9	1880	25.2	1780	25.1	99	3.21	2.82	87.7	86.0
22	197.8	1881	26.7	1782	27.4	99	3.10	2.69	86.5	86.0
23	205.3	1878	26.2	1779	20.8	99	3.22	2.81	87.4	86.1
24	193.5	1882	25.5	1783	20.6	99	3.04	2.64	86.9	86.1
25	203.8	1884	25.8	1784	17.9	99	3.20	2.80	87.5	86.2
Cumulative Mass Removed (lb) (Runs 1 - 25)										**67.8**
Total Mass Loaded (lb) (Runs 1 - 25)										**78.8**

Table 11 Removal Efficiency and Mass Loading Capacity Results (continued)

Run #	Average Influent TSS (mg/L)	Influent Water Volume (gal)	Adjusted Average Effluent TSS (mg/L)	Effluent Water Volume (gal)	Adjusted Average Drain Down TSS (mg/L)	Drain Down Water Volume (gal)	Sediment Mass Delivered to System (lb)	Mass of Captured Sediment (lb)	Single Run Removal Efficiency (%)	Cumulative Removal Efficiency (%)
26	424.5	1885	61.2	1786	34.5	99	6.68	5.74	85.9	86.2
27	413.5	1880	56.7	1781	29.8	99	6.49	5.62	86.6	86.2
28	397.8	1884	60.7	1785	36.1	99	6.25	5.32	85.1	86.1
29	407.8	1888	60.7	1789	36.1	99	6.43	5.49	85.4	86.1
30	405.9	1881	63.2	1782	37.4	99	6.37	5.40	84.8	86.0
31	407.6	1884	60.1	1785	35.7	99	6.41	5.48	85.6	86.0
32	402.8	1865	58.8	1766	39.2	99	6.27	5.37	85.7	86.0
33	402.7	1873	51.8	1774	32.9	99	6.30	5.50	87.4	86.0
34	400.3	1877	57.4	1778	39.6	99	6.27	5.39	85.9	86.0
35	406.4	1870	44.9	1771	45.1	99	6.34	5.64	88.9	86.2
36	402.3	1881	38.8	1782	60.6	99	6.31	5.69	90.1	86.3
37	395.5	1887	66.3	1788	57.2	99	6.23	5.19	83.4	86.2
38	411.4	1896	59.9	1796	41.5	99	6.51	5.58	85.7	86.2
39	419.2	1883	49.7	1783	46.9	99	6.58	5.81	88.2	86.3
40	398.3	1903	60.3	1804	55.5	99	6.33	5.37	84.9	86.2
41	409.3	1891	48.3	1791	52.2	99	6.46	5.69	88.1	86.3
42	413.0	1895	42.3	1795	64.9	99	6.53	5.84	89.5	86.4
43	406.2	1892	46.5	1793	64.5	99	6.41	5.66	88.3	86.5
44	399.8	1898	65.9	1798	56.3	99	6.33	5.29	83.6	86.4
45	408.3	1889	58.7	1790	47.6	99	6.44	5.52	85.8	86.4
46	417.9	1876	49.2	1777	55.6	99	6.54	5.77	88.1	86.4
47	409.7	1902	62.4	1803	53.7	99	6.50	5.52	84.9	86.4
48	404.3	1900	56.5	1800	45.0	99	6.41	5.52	86.2	86.4
49	419.5	1886	60.0	1787	50.2	99	6.60	5.67	85.8	86.3
50	399.1	1898	63.8	1798	42.6	99	6.31	5.32	84.3	86.3
51	406.5	1898	62.1	1799	45.3	99	6.44	5.46	84.9	86.3
52	412.0	1881	58.8	1782	30.1	99	6.47	5.57	86.1	86.2
53	408.5	1887	57.3	1788	44.3	99	6.43	5.54	86.1	86.2
54	402.6	1897	63.5	1797	40.6	99	6.37	5.38	84.5	86.2
55	407.9	1890	61.8	1784	39.7	105	6.43	5.47	85.1	86.2
56	409.2	1888	42.7	1782	44.0	105	6.44	5.77	89.6	86.2
Cumulative Mass Removed (lb) (Runs 1-56)										**239.4**
Total Mass Loaded (lb) (Runs 1-56)										**277.7**

Table 11 Removal Efficiency and Mass Loading Capacity Results (continued)

Run #	Average Influent TSS (mg/L)	Influent Water Volume (gal)	Adjusted Average Effluent TSS (mg/L)	Effluent Water Volume (gal)	Adjusted Average Drain Down TSS (mg/L)	Drain Down Water Volume (gal)	Sediment Mass Delivered to System (lb)	Mass of Captured Sediment (lb)	Single Run Removal Efficiency (%)	Cumulative Removal Efficiency (%)
57	422.7	1847	46.6	1716	30.1	130	6.51	5.81	89.2	86.3
58	411.8	1812	60.4	1712	43.9	100	6.22	5.32	85.6	86.3
59	423.6	1795	66.0	1642	34.1	153	6.34	5.39	85.0	86.2
60	412.3	1810	69.6	1656	35.0	154	6.22	5.22	83.8	86.1
61	411.9	1815	81.5	1655	40.9	160	6.23	5.05	81.1	86.1
62	407.3	1685	75.3	1524	38.5	160	5.72	4.71	82.4	86.0
Cumulative Mass Removed (lb) (Runs 1 - 62)										**270.8**
Total Mass Loaded (lb) (Runs 1 - 62)										**314.9**

5.5 Sediment Mass Loading

Sediment mass loading for each run was approximately 3.2 lbs on average for Runs 1-25, and 6.4 lbs for Runs 26-62. These data are summarized in **Table 12**.

Table 12 Sediment Mass Loading Summary

Run #	Sediment Loading (lb)	Cumulative Sediment Loading (lb)	Mass Captured (lb)	Cumulative Mass Captured (lb)	Run #	Sediment Loading (lb)	Cumulative Sediment Loading (lb)	Mass Captured (lb)	Cumulative Mass Captured (lb)
1	2.98	2.98	2.44	2.44	32	6.27	123.71	5.37	106.19
2	3.00	5.98	2.55	4.99	33	6.30	130.00	5.50	111.69
3	3.12	9.10	2.64	7.63	34	6.27	136.27	5.39	117.07
4	3.25	12.35	2.77	10.40	35	6.34	142.61	5.64	122.71
5	3.28	15.62	2.79	13.19	36	6.31	148.93	5.69	128.40
6	3.08	18.70	2.66	15.85	37	6.23	155.16	5.19	133.59
7	3.11	21.81	2.66	18.51	38	6.51	161.67	5.58	139.17
8	3.07	24.88	2.60	21.11	39	6.58	168.25	5.81	144.97
9	3.14	28.01	2.70	23.81	40	6.33	174.57	5.37	150.35
10	3.14	31.15	2.70	26.51	41	6.46	181.03	5.69	156.04
11	3.31	34.46	2.82	29.33	42	6.53	187.56	5.84	161.88
12	3.26	37.72	2.77	32.10	43	6.41	193.97	5.66	167.54
13	3.21	40.93	2.78	34.88	44	6.33	200.30	5.29	172.84
14	3.11	44.03	2.67	37.55	45	6.44	206.74	5.52	178.36
15	3.25	47.29	2.82	40.36	46	6.54	213.28	5.77	184.12
16	3.10	50.39	2.68	43.05	47	6.50	219.79	5.52	189.64
17	3.09	53.48	2.67	45.72	48	6.41	226.19	5.52	195.17
18	3.02	56.50	2.61	48.33	49	6.60	232.80	5.67	200.83
19	3.24	59.74	2.82	51.15	50	6.31	239.11	5.32	206.15
20	3.30	63.04	2.86	54.01	51	6.44	245.55	5.46	211.62
21	3.21	66.25	2.82	56.82	52	6.47	252.01	5.57	217.18
22	3.10	69.35	2.69	59.51	53	6.43	258.44	5.54	222.72
23	3.22	72.57	2.81	62.32	54	6.37	264.81	5.38	228.11
24	3.04	75.61	2.64	64.96	55	6.43	271.24	5.47	233.58
25	3.20	78.81	2.80	67.77	56	6.44	277.68	5.77	239.35
26	6.68	85.49	5.74	73.50	57	6.51	284.19	5.81	245.15
27	6.49	91.98	5.62	79.12	58	6.22	290.41	5.32	250.48
28	6.25	98.23	5.32	84.44	59	6.34	296.75	5.39	255.87
29	6.43	104.66	5.49	89.93	60	6.22	302.97	5.22	261.08
30	6.37	111.03	5.40	95.33	61	6.23	309.20	5.05	266.13
31	6.41	117.44	5.48	100.82	62	5.72	314.92	4.71	270.84

Sediment mass loading was calculated from the summation of the total sediment mass added during dosing in each run.

Overall, a total of 315 lbs of sediment was loaded into the EcoStream™ 4x4 over the course of the 62 runs. Total captured mass over the 62 runs was 271 lbs.

The relationship between removal efficiency and sediment mass loading is shown in **Figure 9**.

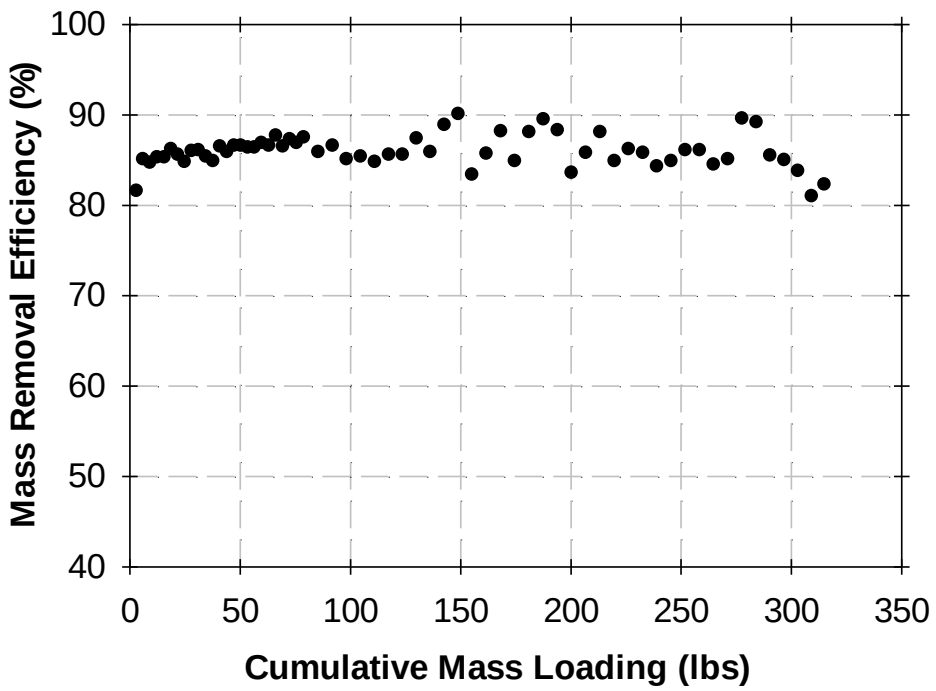

Figure 9 Removal Efficiency vs. Sediment Mass Loading

The relationship between head and sediment mass loading is shown in **Figure 10**.

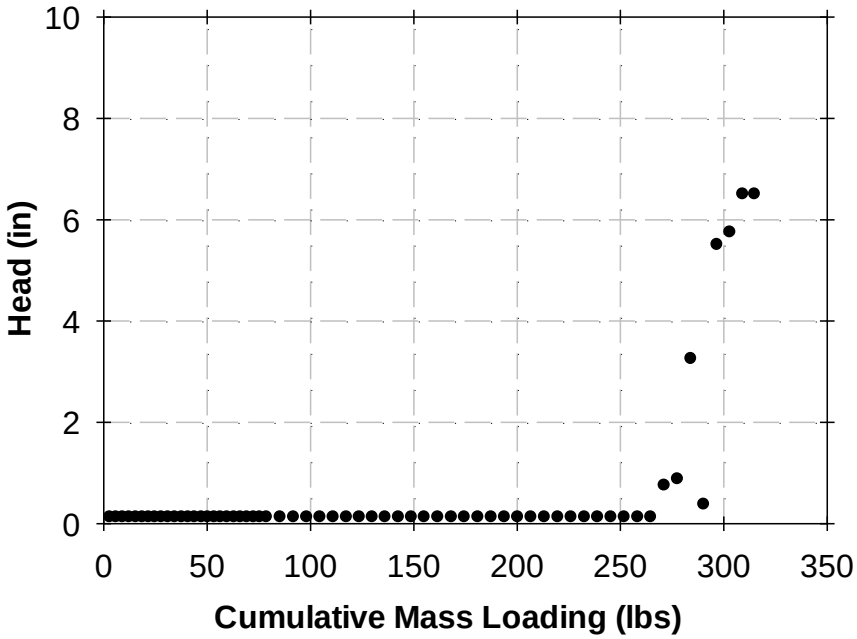

Figure 10 Head vs. Sediment Mass Loading

5.6 Scour

The scour test took place on a unit that had been pre-loaded per the procedure in the NJDEP Filter Protocol with >50% of the manufacturer's recommended maximum sediment storage volume. Scour testing was conducted in accordance with Section 5 of the NJDEP Filter Protocol. Effluent and background samples were taken according to the schedule shown in **Table 13**.

Table 13 Scour Sampling Schedule

Sample	Run Time (min)															
	0	1	3	5	7	9	11	13	15	17	19	21	23	25	27	29
Effluent		X	X	X	X	X	X	X	X	X	X	X	X	X	X	X
Background		X		X		X		X		X		X		X		X

The flow rate during the scour run averaged 131 gpm (198% of MTFR), with a COV of 0.028, which is in compliance with the NJDEP Filter Protocol. The maximum water temperature during the scour run was 61.4 degrees Fahrenheit, which is also in compliance with the NJDEP Filter Protocol.

Scour test TSS results are presented in **Table 14**. The maximum background TSS concentration was 0.8 mg/L, which is below the maximum of 20 mg/L allowed by the NJDEP Filter Protocol. Each effluent TSS concentration was adjusted by subtracting the background concentration. For samples that did not have a corresponding background sample, the background TSS concentration was interpolated from the previous and subsequent background samples' TSS concentrations. The average adjusted TSS concentration of the effluent is 13.3 mg/L. As this value is below the NJDEP-Protocol-specified limit of 20 mg/L, the EcoStream™ Biofiltration System met the requirement for on-line use.

Table 14 Scour TSS Results

	Scour Test TSS Concentrations (mg/L)														
Sample #	1	2	3	4	5	6	7	8	9	10	11	12	13	14	15
Effluent	72.5	36.2	16.5	11.2	11.1	7.9	7.2	6.6	5.1	4.3	4.3	4.9	5.7	6.4	4.5
Background	0.7		0.3		0.1		0.1		0.8		0.1		0.7		0.3
Adjusted Effluent	71.9	35.7	16.2	11.0	11.0	7.8	7.1	6.2	4.4	3.9	4.2	4.5	5.1	6.0	4.2
Average Adjusted Effluent Concentration (mg/L)							13.3								

MDL = 0.2 mg/L; In cases of non-detect, a value equal to ½ the MDL (0.1 mg/L) was used.

6. Design Limitations

Maximum Flow Rate

The EcoStream™ 4x4 has an MTFR of 0.147 cfs (66 gpm) and an effective filtration treatment area (EFTA) of 16 ft^2 (loading rate = 4.125 gpm/ft^2).

Slope

The EcoStream™ Biofiltration System is recommended for installation with little-to-no slope to ensure proper, consistent operation. Steep slopes should be reviewed by ADS Engineering support.

Allowable Head Loss

There is an operational head loss associated with the EcoStream™ Biofiltration System. The head loss will increase over time due to sediment loading to the system. When configured with an internal bypass, a design head loss of 32 inches (from invert of the outlet pipe) should be used. Site-specific treatment flow rates, peak flow rates, pipe diameter, and pipe slopes should be evaluated to ensure there is an appropriate head for the system to function properly.

Sediment Load Capacity

Based on laboratory testing results, the EcoStream™ 4x4 has a mass loading capacity of 271 lbs while operating at a cumulative sediment removal efficiency of 85.4%.

Pre-treatment Requirements

The EcoStream™ Biofiltration System does not require pre-treatment.

Configurations
The EcoStream™ Biofiltration System is available in multiple configurations, with curb, gutter, grated inlet, or straight-in pipe inlets. The EcoStream™ can be installed above, at, or below grade and with or without plants to allow maximum design flexibility.

Structure Load Limitations

The EcoStream™ Biofiltration System is typically located adjacent to a roadway and therefore, the precast vault or structure is designed to handle H-20 traffic loads. For deeper installations or installations requiring a greater load capacity, the system will be designed and manufactured to meet those requirements. ADS provides full-service technical design support throughout the life of a project and can help ensure the system is designed for the appropriate structural load requirements.

7. Maintenance Plan

General Inspection

The EcoStream™ Biofiltration System ("EcoStream™") requires periodic inspection and maintenance for it to operate at the design efficiency. The inspection process helps in deciding when and what level of maintenance will be needed to bring the unit up to or near peak efficiency. As with ADS' other water quality products, the maintenance cycle of the EcoStream™ will be driven mostly by the actual solids and trash/debris load brought into the system.

The frequency of maintenance depends on the site-specific pollutant loading conditions. ADS recommends a visual inspection of the system quarterly for the first year of service, and after every high intensity and high-volume storm event (1 in/hr and greater than 3 inches rainfall within 24 hours) occurring during the first six months. After the first year, systems should be inspected at least bi-annually and ideally before the spring or rainy season and after the summer season, or prior to fall or winter seasons. The inspections should look for signs of but not limited to erosion, displacement, sediment, and trash accumulations in the upper portion of media bed or planting area. It is recommended that some general "good housekeeping" maintenance be performed at the beginning of the rainy or spring season every year. Depending on the site conditions, full system maintenance including removal of all media and plant life may be necessary if ponding water remains on top of the media bed for 24 hours after any storm event.

For most maintenance needs, the EcoStream™ planting component follows the practices used for handling standard bioretention systems (i.e., general landscaping, cover management, and replacement planting of surface plants).

It may be advisable to "water" or irrigate the EcoStream™ plant area in geographical regions experiencing droughts or prolonged periods without rainfall during the first year of service. Watering the plant life will help to ensure the plants can take hold and be established for future growth.

Inspection and General Maintenance Equipment

The following is a list of equipment recommended for inspection and general maintenance.

•Personal Protection Equipment (pants, steel-toed shoes, safety glasses, gloves, safety vest, hard hat, etc.)

•Manhole Hook or Crowbar

•Traffic Cones and Signage

•Stadia Rod and Tape Measure

•Inspection Operation and Maintenance (O&M) Log or other recording method (included at end of guide)

•Flashlight, Trash removal "Net" device, shovel, rake, broom, and trash receptacle

•Vac Truck (if more extensive maintenance is required)

•Light Duty Construction Equipment (if bioretention media replacement is required)

General Inspection and Maintenance Procedures

Routine inspection will ensure that the system is performing at optimal conditions and that the risk of flooding is low. EcoStream™ inspection involves a visual inspection of the plant surface area, structure inlet, and the media bed. This can all be done at the surface and requires no confined space entry into the EcoStream™ unit. An Inspection O&M log should be used, and dates and weather conditions should be noted.

If the EcoStream™ is located in a traffic area (i.e., roadway or automobile travel way), and inspection is not possible without entering the vehicular area, safety measures should be employed (safety cones, etc.) prior to performing the inspection and maintenance.

For inspection of the treatment chamber of the EcoStream™ system, the manhole cover should be safely removed (i.e., using a manhole hook). A visual inspection of any inlet grates should be noted. If grates are missing or inlets are damaged, contact ADS for repair recommendations. A visual inspection of the general appearance of the EcoStream™ should be performed, and notes should be taken detailing the condition of the surface plant life, invasive species intrusion, vandalism, erosion in the planting area and any signs of standing water or disturbed or "shifted" surface soil bed area. This general system condition should be noted in the inspection/maintenance log.

If the plant life and surface media show signs of distress, general landscaping O&M should be performed, i.e., raking, weeding (removal of invasive plants), and general planting replacement to maximize the cover area in the planting bed/media treatment chamber. If ponding of water is present in the media treatment cell and the last rain event was greater than 24 hours prior, further inspection should be performed to ensure the effluent pipe is not blocked.

A visual inspection (with a flashlight if needed) of the inlet (pipe or curb) and media bed should be performed. Remove all trash and debris from the inlet and top of the media bed manually or by vacuum truck as required. If there is a visible sediment load or the media bed appears to have been greatly disturbed during preceding storm events, redistribute or replace the top growth media layer

as needed. If sediment load is heavy, remove the growth media layer and inspect the biofiltration media and replace the top two-inches of media if it appears clogged. Additionally, a further inspection should be undertaken within 24 hours after a major storm event to see if there is standing water in the system. Water stagnation in the treatment chamber indicates that media bed replacement may be recommended. ADS Field Engineering can assist with this analysis.

ADS should be contacted for material specifications and replacement parts. Media chamber replacement will involve utilizing small construction excavation equipment.

Disposal of material from the treatment chamber should be in accordance with the local municipality's requirements. Typically, traditional municipal landfills can be used for disposal of solids and trash obtained from servicing the EcoStream™. Call ADS at 800-821-6710 for further information. See the O&M Guidance Manual at:

https://www.adspipe.com/resources/documents/46DAA1FC-D53D-4B22-AC03FBEF7310E895

8. Statements

The attached pages include signed statements from the manufacturer (Advanced Drainage Systems, Inc.), the independent third-party observer (Boggs Environmental Consultants, Inc.), and NJCAT. These statements are included as a requirement for the verification process.

9. References

ADS (2022). *QAPP for Verification Testing of the Advanced Drainage Systems Stormwater Filtration Treatment System EcoStream™ in accordance with the NJDEP Testing Protocol.*

ASTM D6913-17 (2018). *Standard Test Methods for Particle-Size Distribution (Gradation) of Soils Using Sieve Analysis.*

ASTM D7928-17 (2021). *Standard Test Method for Particle-Size Distribution (Gradation) of Fine-Grained Soils Using the Sedimentation (Hydrometer) Analysis.*

ASTM D2216-19 (2019). *Standard Test Methods for Laboratory Determination of Water (Moisture) Content of Soil and Rock by Mass.*

ASTM D3977-97 (2019). *Standard Test Methods for Determining Concentrations in Water Samples.*

NJDEP 2021. *New Jersey Department of Environmental Protection Procedure for Obtaining Verification of a Stormwater Manufactured Treatment Device from New Jersey Corporation for Advanced Technology.* Trenton, NJ. August 4, 2021.

NJDEP 2022. *New Jersey Department of Environmental Protection Laboratory Protocol to Assess Total Suspended Solids Removal by a Filtration Manufactured Treatment Device.* Trenton, NJ. January 14, 2022.

March 01, 2023

Dr. Richard S. Magee, Sc.D., P.E., BCEE
New Jersey Corporation for Advanced Technology
c/o Center for Environmental Systems
Stevens Institute of Technology
One Castle Point on Hudson
Hoboken, NJ 07030

RE: Verification of the EcoStream™ Biofiltration System

Dr. Richard Magee,

Advanced Drainage Systems is pleased to provide this letter as our statement certifying that the protocol,

"*New Jersey Department of Environmental Protection Laboratory Protocol to Assess Total Suspended Solids Removal by a Filtration Manufactured Treatment Device*" (NJDEP Filter Protocol, January 14, 2022), was strictly followed while testing our EcoStream™ Biofiltration system. The testing was performed at the ADS Water Quality Laboratory, located in Mount Airy, MD under the direct supervision of Boggs Environmental Consulting (BEC) in full compliance with all applicable protocol and process criteria. All data pertaining to the EcoStream™ system NJDEP Protocol test is included in the Verification Report.

Regards,

Bo Liu, P.E. Ph.D.
Advanced Drainage Systems
Research Engineer
Phone (301)252-0418
e-mail: bo.liu@adspipe.com

cc Joe Chylik, ADS

BOGGS
ENVIRONMENTAL CONSULTANTS

Middletown, MD & Morgantown, WV

Administrative Office:
200 W Main Street
Middletown, Maryland 21769
Office (301) 694-5687
Fax (301) 694-9799

March 29, 2023

Advanced Drainage Systems, Inc.
1207 Park Ridge Drive
Mount Airy, MD 21771
kevin.chase@adspipe.com

ATTENTION Kevin Chase
Vice President Project Engineering

REFERENCE: Third Party Review of Testing Procedures of the
Advanced Drainage Systems (ADS) EcoStream™ System at the
ADS Water Quality Laboratory
1207 Park Ridge Drive
Mount Airy, MD 21771

BOGGS ENVIRONMENTAL CONSULTANTS, INC. (BEC) provided Third Party Review services for the testing of the EcoStream™ system to evaluate if the required testing meets certification standards established by the New Jersey Department of Environmental Protection (NJDEP).

LABORATORY TESTING PROCEDURES & METHODOLOGIES

The following two procedures and testing requirements were followed during the testing process of the EcoStream™ system:

- *New Jersey Department of Environmental Protection, Laboratory Protocol to Assess Total Suspended Solids Removal by a Filtration Manufactured Treatment Device, dated January 14, 2022.*
- *QAPP for Verification Testing of the Advanced Drainage Systems Stormwater Filtration Treatment System EcoStream™* in accordance with the NJDEP Testing Protocol (2022).

ONSITE THIRD-PARTY OBSERVATION OF TESTING PROCEDURES

BEC was present at the ADS Water Quality Laboratory, at 1207 Park Ridge Drive, in Mount Airy, MD 21771, to observe 62 removal efficiency / mass loading capacity runs and the scour run to ensure that all testing, data collection, and handling of samples were conducted in accordance with the established protocol.

THIRD-PARTY VERIFICATION & OPINIONS

Based on observations during the runs and the reported TSS analytical results, BEC verified the following:

- That the testing of the EcoStream™ at the ADS Water Quality Laboratory was conducted in accordance with the *New Jersey Department of Environmental Protection, Laboratory Protocol to Assess Total Suspended Solids Removal by a Filtration Manufactured Treatment Device, dated January 14, 2022* and procedures established in the *QAPP for Verification Testing of the Advanced Drainage Systems Stormwater Filtration Treatment System EcoStream™*, prepared by Advanced Drainage Systems, Inc., dated October 20, 2022, and Revised November 14, 2022.
- The report titled *NJCAT Technology Verification of EcoStream™* prepared by Advanced Drainage Systems, Inc., dated March 2023, used applicable NJCAT protocol and accurately reflects the testing observed by BEC.

Should you have any questions, contact our office at your earliest convenience.

Sincerely,
BOGGS ENVIRONMENTAL CONSULTANTS, INC.

William R. Warfel
Principal Environmental Scientist

ENVIRONMENTAL SCIENCE, ENGINEERING & INDUSTRIAL HYGIENE SERVICES

BOGGS
ENVIRONMENTAL CONSULTANTS

Middletown, MD & Morgantown, WV

Administrative Office:
200 W Main Street
Middletown, Maryland 21769
Office (301) 694-5687
Fax (301) 694-9799

March 29, 2023

ATTENTION To Whom it May Concern

REFERENCE: No Conflict of Interest Statement for Third Party Review of Testing Procedures Conducted on the EcoStream™ System at the ADS Water Quality Research Laboratory
1207 Park Ridge Drive
Mount Airy, MD 21771

BOGGS ENVIRONMENTAL CONSULTANTS, INC. (BEC) was hired by Advanced Drainage Systems, Inc. to provide Third Party Review Services and onsite observations of test runs and analysis of the EcoStream™ System to evaluate if the required testing meets established certification standards. Onsite observations and evaluations by BEC were conducted at the ADS Water Quality Research Laboratory, 1207 Park Ridge Drive, Mount Airy, Maryland.

I want to ensure you that there is no conflict of interest between BEC and Advanced Drainage Systems, Inc., for the following reasons:

- BEC has no ownership stake in Advanced Drainage Systems, Inc.
- BEC receives no commission for selling a manufactured treatment device for Advanced Drainage Systems, Inc.
- BEC has no licensing agreement with Advanced Drainage Systems, Inc., and,
- BEC receives no funding or grants associated with the testing program from Advanced Drainage Systems, Inc.

Please give me call if you have any questions.

Sincerely,
BOGGS ENVIRONMENTAL CONSULTANTS, INC.

William R. Warfel
Principal Environmental Scientist

Center for Environmental Systems
Stevens Institute of Technology
One Castle Point
Hoboken, NJ 07030-0000

April 3, 2023

Gabriel Mahon, Chief
NJDEP
Bureau of Non-Point Pollution Control
Division of Water Quality
401 E. State Street
Mail Code 401-02B, PO Box 420
Trenton, NJ 08625-0420

Dear Mr. Mahon,

Based on my review, evaluation and assessment of the testing conducted on a full-scale, commercially available EcoStream™ BioFiltration System, and observed by William R. Warfel, Boggs Environmental Consultants, Inc., Middletown, MD, the test protocol requirements contained in the "New Jersey Laboratory Testing Protocol to Assess Total Suspended Solids Removal by a Filtration Manufactured Treatment Device" (NJDEP Filtration Protocol, January 14, 2022) were met or exceeded**.** Specifically:

Test Sediment Feed

The mean PSD of the EcoStream Biofiltration System (EcoStream) test sediment complied with the PSD criteria established by the NJDEP Filtration protocol. The Advanced Drainage Systems (ADS) EcoStream removal efficiency test sediment PSD analysis was plotted against the NJDEP removal efficiency test PSD specification. The test sediment was shown to be finer than the sediment blend specified by the protocol (<75µm); the test sediment d_{50} was approximately 68 microns.

Removal Efficiency (RE) Testing

Sixty-two (62) removal efficiency test runs were completed in accordance with the NJDEP test protocol. Twenty-five (25) of the 62 test runs were conducted during removal efficiency testing and 37 tests were conducted during mass loading testing. The target flow rate and influent sediment concentration were 66 gpm and 200 mg/L for the removal efficiency testing. The

EcoStream Biofiltration System achieved a cumulative removal efficiency of 86.2% for runs 1 through 25 (85.4% after the first 10 qualifying runs) at the MTFR of 66 gpm (0.147 cfs).

Sediment Mass Loading Capacity

Mass loading capacity testing was conducted as a continuation of removal efficiency testing. Mass loading test runs were conducted using identical testing procedures and flow rate target as those used in the RE runs; the only change was to increase the target influent concentration to 400 mg/L. Testing concluded after 37 mass loading test runs. The EcoStream Biofiltration System achieved a cumulative mass removal efficiency of 86.0% over the 62 trials.

The total influent mass loaded through Run 62 was 314.9 lbs and the total mass captured by the EcoStream was 270.8 lbs. This is equivalent to a sediment mass loading capacity of 16.93 lbs/ft^2 of effective filtration treatment area.

No maintenance was performed on the test system during the testing program.

Scour Testing

The ADS Biofiltration System is designed for online installation. Scour testing at 131 gpm demonstrated an average adjusted effluent concentration of <20mg/L qualifying the MTD for influent flow up to 198% MTFR.

Sincerely,

Richard S. Magee, Sc.D., P.E., BCEE
Executive Director

VERIFICATION APPENDIX

Introduction

- Manufacturer – Advanced Drainage Systems, Inc, 4640 Trueman Blvd, Hilliard, OH 43026 Website: https://www.ads-pipe.com Phone: 800-229-7283.
- MTD EcoStream™ Biofiltration System verified models are shown in **Table A-1**.
- TSS Removal Rate – 80%
- On-line installation up to 198% MTFR

Detailed Specification

- NJDEP sizing tables and physical dimensions of EcoStream™ Biofiltration System verified models are attached (**Table A-1**). These sizing tables are valid for NJ following NJDEP Water Quality Design Storm Event of 1.25" in 2 hours (NJAC 7:8-5.5(a)).

- Maximum inflow drainage area
    - The maximum inflow drainage area is governed by the maximum treatment flow rate of each model as presented in **Table A-1**.

- Driving head will vary for a given EcoStream™ model based on the site-specific configuration. The maximum head available until bypass is 32" (from invert out), but the minimum head varies depending on the flow rate through the unit and the cumulative mass captured in the biofiltration cell over time. Design support is given by Advanced Drainage Systems for each project, and site-specific drawings (cut sheets) will be provided that show pipe inverts, finish surface elevation and peak treatment and maximum flow rates through the unit.

- The drawdown flow exits via an effluent pipe at the bottom of the filter bed. A clean filter draws down in approximately 20 minutes.

- See Advanced Drainage Systems EcoStream™ Biofiltration System O&M Guidance Manual for inspection and maintenance procedures: https://www.adspipe.com/resources/documents/46DAA1FC-D53D-4B22-AC03FBEF7310E895

Table A-1 EcoStream™ Biofiltration System Model Sizes and New Jersey Treatment Capability

Model	Treatment Cell (ft)	Effective Filtration Treatment Area[1] (EFTA) (ft^2)	Effective Sedimentation Treatment Area (ESTA) (ft^2)	Treatment Flow Rate[2] (cfs)	ESTA / EFTA	Drainage Area[3] (acres)
EcoStream 4x4	4X4	16	16	0.147	1	0.452
EcoStream 4x6	4X6	24	24	0.221	1	0.678
EcoStream 4x8	4X8	32	32	0.294	1	0.903
EcoStream 4x10	4X10	40	40	0.368	1	1.129
EcoStream 4x12	4X12	48	48	0.441	1	1.355
EcoStream 6x6	6X6	36	36	0.331	1	1.016
EcoStream 6x8	6X8	48	48	0.441	1	1.355
EcoStream 6x10	6X10	60	60	0.551	1	1.693
EcoStream 6x12	6X12	72	72	0.662	1	2.033
EcoStream 8x10	8X10	80	80	0.735	1	2.258
EcoStream 8x12	8X12	96	96	0.882	1	3.710[4]
EcoStream 8x14	8X14	112	112	1.029	1	3.162[4]
EcoStream 8x16	8X16	128	128	1.176	1	3.613[4]

1. Since the treatment system is a horizontal filter, the media surface area (MSA) equals both the effective sedimentation treatment area (ESTA) and the effective filtration treatment area (EFTA).
2. MTFR is based on 4.125 gpm/ft^2 (0.009 cfs/ft^2) of effective filtration treatment area.
3. Drainage area is based on 16.93 lb./ft^2 (270.8 lb./16 ft^2) of effective filtration treatment area and the equation in the NJDEP Filtration Protocol Appendix, where drainage area is calculated based on 600 lbs. of mass contributed per acre of drainage area annually.
4. NJDEP regulations limit the contributory drainage area for GI MTD's to 2.5 acres.