NJCAT TECHNOLOGY VERIFICATION

BayFilter™ Enhanced Media Cartridge

BaySaver Technologies, LLC

November, 2016

TABLE OF CONTENTS

List of Figures ii

List of Tables iii

1. Description of Technology 1

2. Laboratory Testing 2
   - 2.1 Test Setup 3
   - 2.2 Test Sediment 8
   - 2.3 Sediment Removal Efficiency Testing 10
   - 2.4 Sediment Mass Loading Capacity 11
   - 2.5 Scour Testing 11

3. Performance Claims 11

4. Supporting Documentation 12
   - 4.1 Flow Rate 12
   - 4.2 Water Temperature 16
   - 4.3 Sediment Concentration and Removal Efficiency 17
   - 4.4 Sediment Mass Loading 23
   - 4.5 Replicate Samples 25
   - 4.6 Outside Analysis of Replicates 30
   - 4.7 Sediment Feed Samples 31

5. Design Limitations 33

6. Maintenance Plans 35

7. Statements 36

8. References 42

Verification Appendix 43

List of Figures

Page

Figure 1 BayFilter™ Cut-Away View of System…… 1

Figure 2 BayFilter™ Vault and Cartridges 2

Figure 3 Schematic of the BayFilter™ EMC 545 Test Setup 3

Figure 4 Photo of the Test Setup 4

Figure 5 BayFilter™ EMC 545 Product Specifications.....5

Figure 6 BayFilter™ EMC 545 Test Tank Effective Sedimentation Area 6

Figure 7 Average PSD of Test Sediment Verified by ECS and GSA.....8

Figure 8 Photo of the Flow-Measurement System 13

Figure 9 Maximum Temperature (Fahrenheit) for Each Run 17

Figure 10 Removal Efficiency vs. Sediment Mass Loading 24

Figure 11 Observed Driving Head vs. Sediment Mass Loading.....24

Figure 12 Flow Rate vs. Sediment Mass Loading.....25

List of Tables

Page

Table 1 BayFilter™ EMC Scaling Explanation.....6

Table 2 Particle Size Distribution of Test Sediment as Analyzed by ECS.....9

Table 3 Particle Size Distribution of Test Sediment as Analyzed by GSA 9

Table 4 Flow Rate Summary for All Runs 13

Table 5 Influent Sediment Concentration Summary for All Runs..... 18

Table 6 Sediment Concentrations and Removal Efficiency Summary for All Runs... 21

Table 7 Replicate Effluent TSS Samples..... 25

Table 8 Replicate Influent TSS Samples 28

Table 9 Replicate Samples by MASWRC and Fredericktowne Lab 30

Table 10 Sediment Feed Sample Mass for all Runs 31

Table A-1 BayFilter™ 545 and 545LP EMC Design Parameters 45

Table A-2 MTFRs and Maximum Allowable Drainage Area for BayFilter™ 545 and 545LP EMCs 46

1. Description of Technology

The BayFilter™ Enhanced Media Cartridge (BayFilter™ EMC), **Figure 1**, is a storm water quality treatment device that removes contaminants from storm water runoff via media filtration. Media filtration has long been used in drinking water and wastewater treatment processes. This technology has proven effective at removing sediments, nutrients, heavy metals, and a wide variety of organic contaminants. The target pollutants, hydraulic retention time, filter media, pretreatment, and flow rate all affect the removal efficiency of the BayFilter™ Enhanced Media Cartridge.

BayFilter™ EMCs remove pollutants from water by two mechanisms: interception/attachment and adsorption. Interception occurs when a pollutant becomes trapped within the filter media. A sediment particle, for example, may be carried into the filter media by the water and become stuck in the interstices of the media, where it may attach to the media. Such a particle typically remains trapped until the media is removed or the filter is backwashed. Adsorption is a surface process by which dissolved ions are removed from a solution and chemically bind themselves to the surface of the media. This occurs when the surface of the filter media particle contains sites that are chemically attractive to the dissolved ions. BayFilter™ EMCs use a proprietary media containing activated alumina to enhance adsorption of anions, such as phosphates.

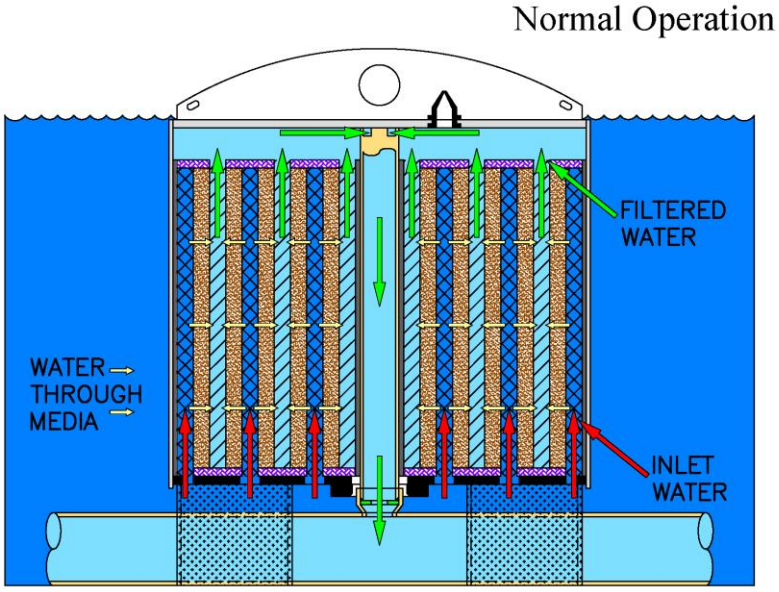

Figure 1 Cut-Away View of the System and Relevant Piping Connections (with Center Vertical Drain)

As shown in **Figure 2**, BayFilter™ cartridges are enclosed in a housing, which may be a vault, manhole, or other structure. This structure contains the inlet and outlet pipes, as well as an internal manifold that delivers treated water to the outlet of the BayFilter™ storm water filtration system.

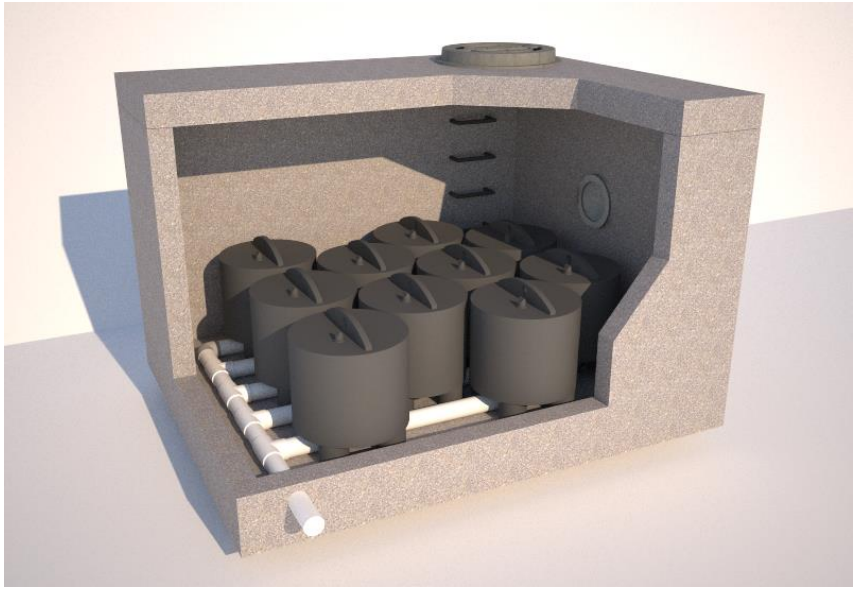

Figure 2 BayFilter™ Vault and Cartridges

Storm water runoff enters the manhole or concrete vault via an inlet pipe and begins to fill the structure. Coarse sediments typically settle on the floor of the vault. When the water surface elevation in the vault/manhole reaches operating level, water flows through the BayFilter™ EMC driven by hydrostatic head. Within the BayFilter™ cartridge, the water flows through an enhanced filter medium, and drains via a vertical pipe. The vertical drain is connected to the under-drain system, which conveys filtered water to the outfall. System design is offline with an external bypass that routes high-intensity storms away from the system to prevent sediment re-suspension. Flow through the filter cartridge is gravity-driven and self-regulating. The BayFilter™ system has no moving parts or electrical power requirements.

The BayFilter™ EMC relies on a vertically configured, spiral-wound construction that optimizes the potential filter media area in a horizontal plane. Media area and media composition, with flow regulation, control the particle and nutrient removal efficiency, total load of removed material, and life cycle of the filter. The BayFilter™ cartridges come in a variety of sizes and use approximately 0.5 gpm/ft^2 of media area to determine the operating flow rate. The most popular size of BayFilter™ (EMC 545) has 90 square feet of media in a 30.8-inch tall, 28-inch diameter cartridge. The flow through the media of this size cartridge yields approximately 45 gpm.

2. Laboratory Testing

Beginning in October, 2015, one BayFilter™ Enhanced Media Cartridge (commercial unit model 545) was installed at the Mid-Atlantic Storm Water Research Center (MASWRC, a subsidiary of BaySaver), in Mount Airy, Maryland, to evaluate the performance of BayFilter™ on Total Suspended Solid (TSS) removal. All testing and data collection procedures were supervised by Boggs Environmental Consultants, Inc., and in accordance with the *New Jersey Department of Environmental Protection Laboratory Protocol to Assess Total Suspended Solids*

Removal by a Filtration Manufactured Treatment Device (January 2013). Prior to the start of testing, a Quality Assurance Project Plan (QAPP), revision dated September 2, 2015, was submitted and approved by the New Jersey Corporation for Advanced Technology (NJCAT).

2.1 Test Setup

The test setup (**Figure 3**) consisted of a source tank, two head tanks, a storage tank with float control, a slurry tub, a doser (IPM systems, Barracuda 500A), a mixing tub, and a 36-inch-diameter test tank where a single BayFilter™ EMC 545 was situated.

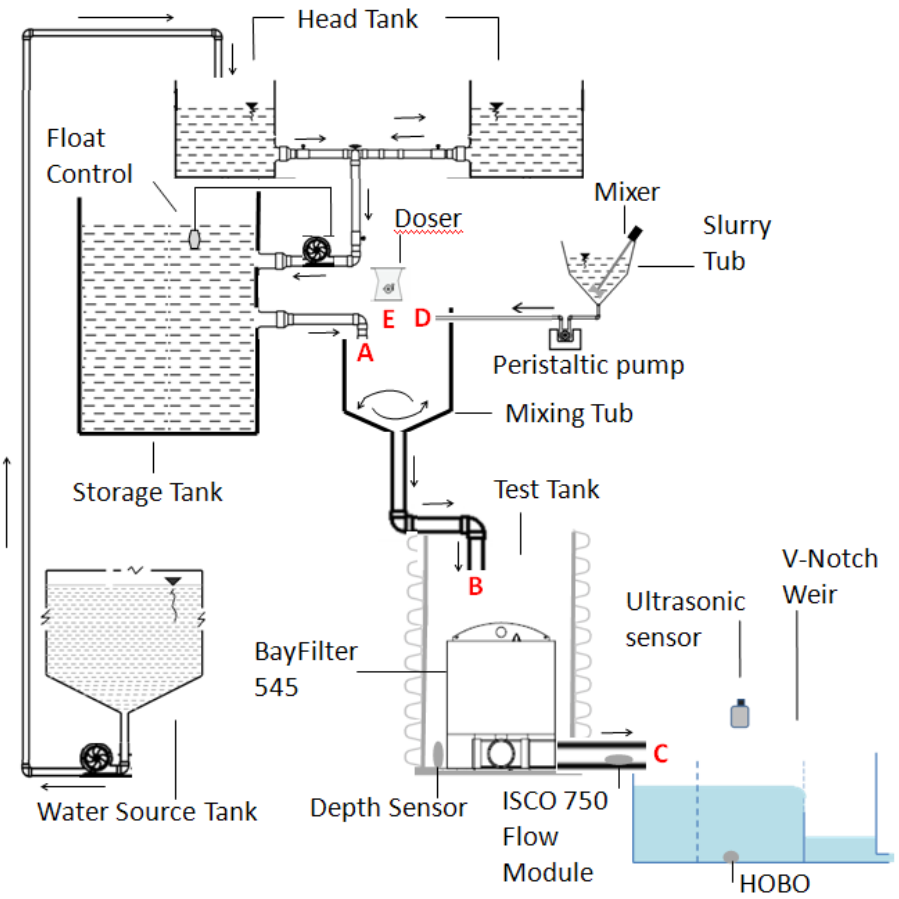

Figure 3 Schematic of the BayFilter™ EMC 545 Test Setup

The letters A, B, and C indicate the locations where background, influent and effluent samples were collected, respectively. The letters D and E indicate the locations of the injection points for the stock solution and doser, respectively.

Testing Procedure

The water source was potable water from the Town of Mount Airy Water & Sewer Department, obtained from an onsite tap, which served as the raw water supply for the testing system. An

electric pump with a capacity of 200-gpm and a PVC flow system were used to reach the range of flow rates tested in this study. Municipal tap water entered the source tank and was pumped to the head tanks. From there, it flowed to the storage tank, which was controlled by a float sensor. The finer components of the test sediment (Coarse Spec and Min-U-Sil 40, < 250 µm) were diluted to a stock solution in the slurry tub, where an electric mixer (Neptune L-1-CL) was used to ensure uniform distribution. Splitting the sediment into two separate feeds was necessary, due to the difficulty of maintaining uniform distribution of coarse sediments (Red Flint, > 250 µm) in the water column. To achieve better accuracy and consistency, the doser was used for Red Flint sand. A peristaltic pump drove the mixed stock solution through an injection line and into the mixing tank at a rate of 0.25 gpm, where it combined with coarse sediment from the doser and water from the storage tank (**Figure 4**). The resulting water-sediment mixture had a target concentration of 200 mg/L and was discharged from the mixing tank at a rate of 44.75 gpm. The peristaltic pump and the doser were calibrated accordingly to produce the nominal influent TSS concentration. A 30-foot long, 4-inch PVC delivery line ensured that the influent was mixed sufficiently before it reached the EMC test tank.

The flow rate of treated water was monitored as it left the test tank. Measurements were initially obtained by an ISCO 750 area velocity flow module, but readings were unreliable, sometimes varying more than 30%, in spite of stable flow rates through the filter. Consultation with an ISCO technician indicated the inaccuracies were because of the sensor's position, which was slightly below the water level. To measure effluent flow more accurately, an ultrasonic sensor was mounted above the notched chamber of a v-notch weir and set to record a flow measurement every minute. In addition, a HOBO data logger was placed in the notched chamber and set to record temperature and pressure every minute, and the timed-bucket method was used every 10 minutes to corroborate data from electronic flow measurement.

Figure 4 Photo of the Test Setup

The black slurry tub in the foreground contains the finer sediments which are diluted to a stock solution. This mixture travels through an injection line (the small, clear tubing on the right side

of the photograph) to the corrugated mixing tub in the background. The doser (top left) is positioned such that it feeds the appropriate amount of Red Flint directly into the mixing tank to combine with the fine sediments and municipal tap water.

Test Cartridge and Scaling Explanation

The BayFilter™ EMC test cartridge contains the same depth of media, composition of media, and gradation of media in all models. The single cartridge tested was a commercially available unit (BayFilter™ EMC 545; product details in **Figure 5**). For the single-cartridge system, the ratio of the maximum treatment flow rate (MTFR) to the effective filtration treatment area (EFTA) is 0.5 gpm/ft^2 and the ratio of effective sedimentation area (ESA) to effective filtration treatment area (ESA/EFTA) is 6.5 ft^2 per 90 ft^2 (which equals 0.072). The ratio of wet volume (WV) to effective filtration treatment area (WV/EFTA) is 14.1 ft^3 per 90 ft^2 (which equals 0.157 ft). As shown in **Figure 6**, the area blocked out is a portion of the tank that is filled to specifically limit the settling area. That portion accounts for 0.57 ft^2 and the resulting ESA is 6.5 ft^2. Given these data, the test results can be effectively scaled to all BayFilter™ commercially offered configurations, as shown in **Table 1**. The BayFilter™ 545LP (lower profile) is a shorter unit (18 inches), identical in design, with an EFTA of 45 ft^2 designed to treat 22.5 gpm.

Product Specification (BayFilter EMC 545)	
Diameter (in)	**30**
Height (in)	**31**
Weight (lb.)	**250**
Effective Filtration Treatment Area (ft^2)	**90**
Surface Loading Rate (gpm/ft^2)	**0.5**
Flow Rate (gpm)	**45**
Manifold Size (in)	**6**

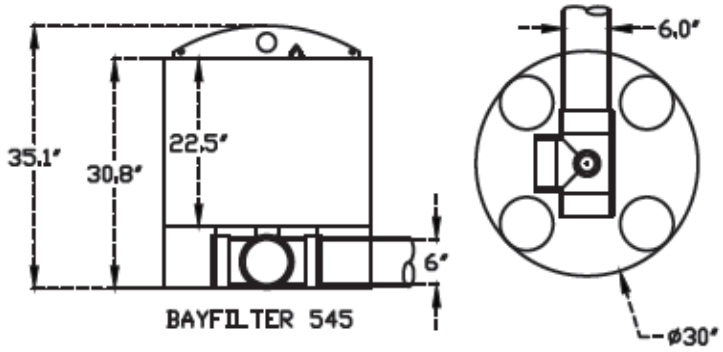

Figure 5 BayFilter™ EMC 545 Product Specifications

Table 1 - BayFilter™ EMC Scaling Explanation

Configuration	Effective Sedimentation Area (ESA) ft^2	Number of Cartridges	MTFR/EFTA gpm/ ft^2	ESA/EFTA	WV/EFTA ft
Test	**6.5**	**1**	**0.5**	**0.072**	**0.157**
4' manhole	12.57	1	0.5	0.140	0.358
4' by 6' vault	24	2	0.5	0.133	0.340
5' manhole	19.63	3	0.5	0.073	0.163
6' manhole	28.27	4	0.5	0.079	0.180
6' by 6' vault	36	4	0.5	0.100	0.243
7' manhole	38.48	5	0.5	0.089	0.200
8' manhole	50.27	7	0.5	0.080	0.184
8' by 10'vault	80	10	0.5	0.089	0.210
8' by 12' vault	96	13	0.5	0.082	0.190
8' by 14' vault	112	15	0.5	0.083	0.193
8' by 16' vault	128	18	0.5	0.079	0.181
10' by 16' vault	160	21	0.5	0.085	0.198
10' by 20' vault	200	27	0.5	0.082	0.191

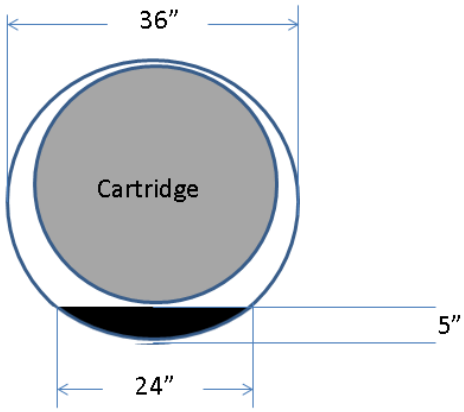

Figure 6 BayFilter™ EMC 545 Test Tank Effective Sedimentation Area

Sample Collection

The grab sampling method was used for all sample collections by sweeping a wide-mouth 1-L glass jar through an openly flowing stream, to ensure the full cross section of the flow was sampled. The start time for each run was recorded. Background water samples were collected upstream of the mixing tub (**Figure 3**, A) in correspondence with the odd-numbered effluent samples (i.e., t = 10, 30, 50 min). Influent sample collection occurred at the influent discharge

(B), and effluent and drain-down sampling at the filter effluent discharge pipe (C) every ten minutes and at the end of each run, respectively. Sediment feed samples were collected downstream of the peristaltic pump and from the doser, respectively for 20 seconds at the beginning, middle, and end of each run (t = 4, 34, 54 min) to ensure consistent operation of the peristaltic pump and doser. Six influent and effluent samples were collected and analyzed in-house during each run under the supervision of Boggs Environmental, Inc. Three additional replicate influent samples and effluent samples were collected to check the consistency and variance between BaySaver labs and Fredericktowne lab. The duration of each run was approximately one hour.

A chain-of-custody form was completed at the conclusion of each run to denote the sample collection date and time. When replicate samples were sent to Fredericktowne lab for analysis, each person taking or relinquishing possession of the samples was required to sign a chain of custody form before samples changed hands.

Drain Down Volume

Prior to the start of testing, the baseline drain-down volume was measured during a run with clean municipal tap water. Water was allowed to flow through the cartridge until the head in the test tank reached a constant level. The depth of the water in the test tank was measured using the Global Logger depth gauge. Then, the flow was stopped, the water was drained out and the volume was recorded. Because the drain-down volume varied among runs, the calculated volume was adjusted depending on the depth of the water in the test tank at the conclusion of each run.

Other Instrumentation and Measurement

Water temperature was recorded every minute by a HOBO data logger placed in the notched chamber of the v-notch weir and verified every 10 minutes by a digital thermometer. The water level in the BayFilter™ test tank during the run was recorded every 1 minute by a Global Logger depth gauge. Run and sampling times were measured using a stopwatch (RadioShack LCD Stopwatch 12A09).

Laboratory Blanks

Prior to the start of testing, a laboratory blank (blank run) was performed to evaluate any possible contamination introduced by the testing system during sampling activities. Tap water with no added sediment was run through the BayFilter™ and samples were collected and handled according to procedure for subsequent samples. Results of the blank run are included in **Tables 4** and **6.**

2.2 Test Sediment

The test sediment had the particle size distribution presented in **Figure 7**. The BayFilter™ EMC Test Blend consisted of 4 types of manufactured sands: 47% of Coarse Spec, 43% of Min-U-Sil 40, 5% of Red Flint 0.20 – 0.30, and 5% of Red Flint 0.45 – 0.55. The blend ratio of those sands was determined such that the size distribution of the resulting blended sediment would meet the specifications listed in the New Jersey Department of Environmental Protection Laboratory Protocol to Assess Total Suspended Solids Removal by a Filtration Manufactured Treatment Device (NJDEP test protocol). We plotted the particle size distribution of the NJDEP test against the values of the BaySaver test blend, which was analyzed by Environmental Consulting Services (ECS) and GeoSystems Analysis, Inc., (GSA), using the methodology of ASTM method D422-63. The particle size distribution (PSD) test results as analyzed by ECS are summarized in **Table 2** and the PSD test results as analyzed by GSA are summarized in **Table 3.**

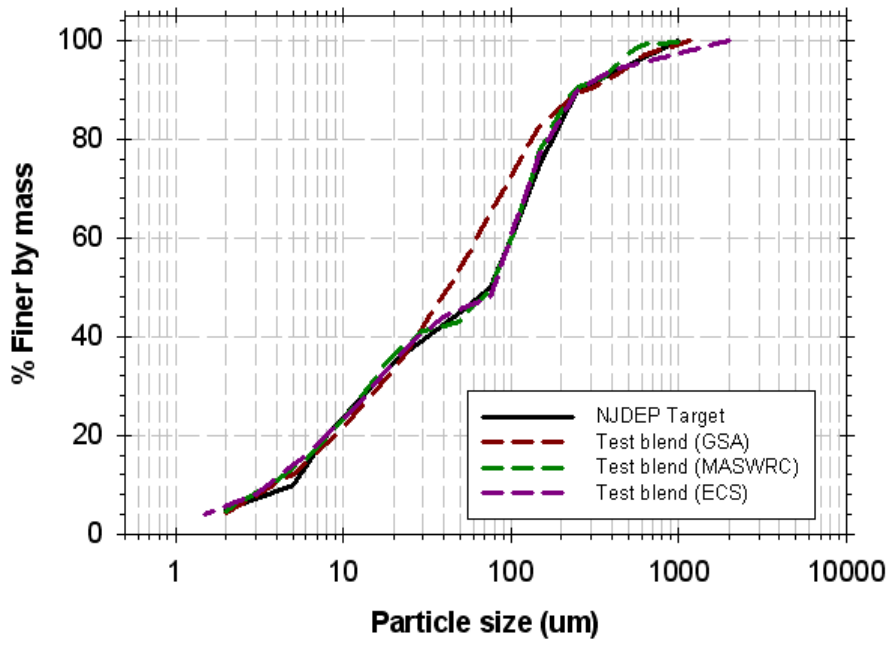

Figure 7 Average PSD of Test Sediment Verified by ECS and GSA

Table 2 - Particle Size Distribution of Test Sediment as Analyzed by ECS

Particle Size (µm)	Test Blend % Finer by Mass Analyzed By ECS				
	NJ Blend A	NJ Blend B	NJ Blend C	Average	NJDEP Specification (minimum % passing)
1000	98	98	98	98	98
500	95	95	95	95	93
250	89	90	90	90	88
150	79	78	77	78	73
100	60	59	60	60	58
75	48	48	48	48	48
50	45	46	45.5	46	43
20	36	34	35	35	33
8	20	20	20	20	18
5	14	14	14	14	8
2	5.5	5	5	5	3

Table 3 - Particle Size Distribution of Test Sediment as Analyzed by GSA

Particle Size (µm)	Test Blend % Finer by Mass Analyzed By GSA				
	NJ Blend A	NJ Blend B	NJ Blend C	Average	NJDEP Specification (minimum % passing)
1000	99	99	99	99	98
500	95	94	95	95	93
250	90	88	90	89	88
150	86	82	81	83	73
100	77	72	66	72	58
75	72.1	64.7	57	65	48
50	61.4	52.6	47.8	54	43
20	40.4	29.9	30.2	34	33
8	24.1	15.3	16.9	19	18
5	16.8	8	11.7	12	8
2	6.7	1.7	4.7	4	3

As reflected in **Table 2** and **Table 3**, both GSA and ECS results showed that 19-20% of the test sediments were less than 8 µm and 89-90% of the test sediments were less than 250 µm. The median size particles d_{50}'s (approximately 75 µm) also indicated that there was no significant difference among NJDEP target gradation, manufacture gradation, and ECS-verified gradation. GSA result showed d_{50} was about 50 µm, which was slightly finer than the NJDEP target gradation. The blended test sediment was found to meet the NJDEP particle size specification and was acceptable for use.

2.3 Sediment Removal Efficiency Testing

Sediment removal efficiency testing adhered to the guidelines set forth in Section 5 of the NJDEP test protocol. The target flow rate through the system was 45 gpm, with a target sediment concentration of 200 mg/L. All samples were collected in clean, 1-L wide-mouth jars. Three background samples were taken at 10, 30 and 50 minutes after the test began to ensure the tap water source met the sediment concentration requirement. According to the NJDEP test protocol, these background concentrations cannot exceed a TSS of 20 mg/L.

To confirm sediment feed rates, sediment samples were taken at 4, 34, and 54 minutes. A sample jar was positioned below the injection line from the peristaltic pump for 20 seconds, then below the doser for an additional 20 seconds to collect a representative sample. Sampling time was determined by the stopwatch. These sediment samples were not used to calculate influent sediment concentrations since influent grab samples were collected at the end of the inlet delivery pipe every ten minutes after the test started.

Effluent sampling was performed by the grab sampling method every ten minutes during each run. When the test sediment feed was interrupted for test sediment measurements, the next influent and effluent samples were collected after three detention times (approximately six minutes) had elapsed. During the drain-down period, two evenly spaced samples were collected after flow and sediment feed had stopped. The drain-down time varied among runs (between 3 and 6 minutes for most runs), depending on the depth reading in the test tank after the flow and sediment feeds had stopped. If the termination of the test run occurred in between the last two data points we averaged those to data points. All sediment concentration samples were analyzed using the ASTMD3977-97 protocol for TSS. TSS values were calculated by dividing the total sediment mass of the sample by the total volume of water from the sample. Removal efficiency was calculated using the following equation from the NJDEP test protocol:

$$\text{Removal Efficiency (\%)} = \frac{\left(\begin{array}{c}\text{Average Influent}\\ \text{TSS Concentration x}\\ \text{Total Volume}\\ \text{of Test Water}\end{array}\right) - \left(\begin{array}{c}\text{Adjusted Effluent}\\ \text{TSS Concentration x}\\ \text{Total Volume}\\ \text{of Test Water}\end{array}\right) - \left(\begin{array}{c}\text{Average}\\ \text{Drawdown Flow}\\ \text{TSS Concentration x}\\ \text{Total Volume}\\ \text{of Drawdown Water}\end{array}\right)}{\begin{array}{c}\text{Average Influent TSS Concentration x}\\ \text{Total Volume of Test Water}\end{array}} \text{ x } 100$$

2.4 Sediment Mass Loading Capacity

The sediment mass loading capacity of the BayFilter™ EMC is defined as the point at which the average effluent flow rate during removal efficiency testing drops to below 90% of the design flow rate. To determine this, removal efficiency testing was extended until three consecutive runs had average effluent flow rates below 41 gpm.

2.5 Scour Testing

No scour testing was conducted, since the BayFilter™ EMC system was tested for installation as an off-line system at this time.

3. Performance Claims

Per the NJDEP verification procedure and based on the laboratory testing conducted for the BayFilter™ EMC, the following are the performance claims made by BaySaver Technologies, LLC.

Total Suspended Solids (TSS) Removal Efficiency

Based on the laboratory testing conducted, the BayFilter™ EMC achieved 83.1% removal efficiency of TSS.

Maximum Treatment Flow Rate (MTFR)

Although the MTFR varies among the BayFilter™ EMC model sizes and the number of cartridges, the surface loading rate remains the same (0.5 gpm/ft^2 of filter treatment surface area). The test unit was a single BayFilter™ EMC cartridge (BayFilter™ model 545) with a MTFR of 0.1 cfs (45 gpm) and an effective filtration treatment area (EFTA) of 90 ft^2. The flow through each cartridge is regulated by a flow disk which is situated inside the vertical riser of the manifold connection.

Maximum Sediment Storage Depth and Volume

The sediment storage volume and depth vary according to the BayFilter™ EMC model sizes and the system size. For the BF545 single cartridge tested system, the maximum sediment storage volume is 2.84 ft^3 at a sediment depth of 6 inches.

Detention Time and Volume

The BayFilter™ EMC detention time and wet volume varies with model size. The unit tested had a wet volume of 14.1 ft^{3}and a detention time of around 2 minutes.

Effective Sedimentation/Filtration Treatment Areas

The Effective Sedimentation Area (ESA) increases as the number of cartridges increases, with a large-scale system having a higher ESA. The Effective Filtration Treatment Area (EFTA) also increases as the number of cartridges. Under test conditions with a single cartridge, the ESA and the ratio of ESA/EFTA were 6.5 ft^2 and 6.5/90 (0.072), respectively. This is more restrictive than real-world commercial applications where vault area to cartridge areas is not as limiting.

Sediment Mass Load Capacity

The sedimentation mass loading capacity varies with the BayFilter™ configuration and the number of cartridges. Based on the laboratory testing results, the single BayFilter™ EMC cartridge has a mass loading capacity of 262 lbs captured out of the 315 lbs delivered to the system.

4. Supporting Documentation

The NJDEP Procedure (NJDEP, 2013a) for obtaining verification of a stormwater manufactured treatment device (MTD) from the New Jersey Corporation for Advanced Technology (NJCAT) requires that "copies of the laboratory test reports, including all collected and measured data; all data from performance evaluation test runs; spreadsheets containing original data from all performance test runs; all pertinent calculations; etc." be included in this section. This was discussed with NJDEP and it was agreed that as long as such documentation could be made available by NJCAT upon request that it would not be prudent or necessary to include all this information in this verification report. This information was provided to NJCAT and is available upon request.

A total of 76 removal efficiency testing runs were completed in accordance with the NJDEP test protocol. The target flow rate and influent sediment concentration were 45 gpm and 200 mg/L respectively. Although the flow rates were still above 40 gpm (90% of the target flow), the removal efficiencies dropped below 80% after run 70. The results from the first 70 runs were used to calculate the overall removal efficiency and sediment capacity of the BayFilter™ 545.

4.1 Flow Rate

For the first five runs, flow rates were recorded every one minute by an ISCO 750 flow module installed in the effluent pipe. The readings varied widely, despite a constant flow rate through the filter (as verified by the timed-bucket method). According to an ISCO technician the low water level in the pipe, the positioning of the sensor, and upstream turbulence may have contributed to this variability. Based on the recommendation of the ISCO technician, a 60-degree v-notch weir and a calibrated ISCO (model 4210) ultrasonic sensor were installed downstream of the discharge pipe prior to run 6 to provide more accurate flow data (**Figure 8**) every one minute. Due to the initial variability in readings, the flow meter results were not utilized for runs 1 through 5. Timed bucket data was utilized for these runs instead.

Figure 8 Photo of the Flow-Measurement System. The v-notch weir is in the foreground, with the ultrasonic sensor mounted above and slightly left-of-center in the photograph

Ten minutes into run 25, while the first influent sample was being taken, a dramatically diminished influent flow rate was noted. It quickly became apparent that the feed pressure valve upstream of the mixing tank had not been fully opened. The issue was remedied in a couple of minutes, but the first pair of influent samples showed an significantly increased influent TSS concentration (> 500 mg/L) as a result of the low initial flow rate. Those values were excluded from the average influent TSS calculation for this run.

For each run, the flow rate was maintained within 10% of the target flow rate (45 gpm). The average flow rate among all runs was 44.7 gpm. The average flow rates for the last six runs fell into the 41 gpm range (90% of the target) and, as a result, testing was stopped. The flow data and corresponding coefficients of variation (COVs) for all 76 runs are summarized in **Table 4**.

TABLE 4
FLOW RATE SUMMARY FOR ALL RUNS

Run #	Min	Max	Average	COV	Compliance
	gpm	gpm	gpm		(COV< 0.1)
Blank	43.86	47.31	45.86	0.026	Y
1	43.86	47.32	45.83	0.028	Y
2	45.54	48.23	46.69	0.022	Y
3	43.80	48.23	46.47	0.016	Y
4	43.48	47.32	45.80	0.016	Y
5	44.91	47.77	46.06	0.009	Y
6	42.67	47.30	46.00	0.015	Y

TABLE 4
FLOW RATE SUMMARY FOR ALL RUNS

Run #	Min	Max	Average	COV	Compliance
	gpm	gpm	gpm		(COV< 0.1)
7	42.81	44.40	43.59	0.009	Y
8	43.40	45.06	44.52	0.008	Y
9	43.15	47.31	45.57	0.015	Y
10	41.41	44.69	43.18	0.019	Y
11	44.80	49.82	46.84	0.018	Y
12	44.77	46.53	45.60	0.011	Y
13	42.47	46.45	45.71	0.011	Y
14	42.83	45.44	44.33	0.016	Y
15	46.02	49.86	48.25	0.020	Y
16	45.06	49.96	47.76	0.018	Y
17	46.26	47.57	46.92	0.006	Y
18	46.27	48.52	47.54	0.013	Y
19	42.24	45.00	44.06	0.014	Y
20	45.89	49.12	47.12	0.016	Y
21	46.44	48.62	47.35	0.009	Y
22	45.75	47.02	46.38	0.009	Y
23	45.37	47.17	46.32	0.007	Y
24	42.98	45.97	44.58	0.016	Y
25	43.18	46.17	45.00	0.015	Y
26	44.54	47.96	46.59	0.019	Y
27	44.44	46.35	45.78	0.009	Y
28	42.91	45.60	44.71	0.015	Y
29	43.52	46.45	44.80	0.015	Y
30	44.36	46.85	45.68	0.015	Y
31	45.23	47.63	46.34	0.012	Y
32	42.40	45.68	44.98	0.015	Y
33	43.89	45.10	44.68	0.006	Y
34	43.27	45.26	44.57	0.011	Y
35	42.90	46.80	45.24	0.024	Y
36	43.70	45.32	44.59	0.009	Y

TABLE 4
FLOW RATE SUMMARY FOR ALL RUNS

Run #	Min	Max	Average	COV	Compliance
	gpm	gpm	gpm		(COV< 0.1)
37	42.78	46.10	44.04	0.022	Y
38	42.91	46.80	45.19	0.019	Y
39	44.04	46.44	45.58	0.015	Y
40	43.64	45.43	44.72	0.012	Y
41	42.83	44.92	44.18	0.012	Y
42	43.87	48.18	45.94	0.027	Y
43	43.56	45.09	44.33	0.008	Y
44	43.37	45.86	44.83	0.015	Y
45	43.01	45.76	44.36	0.017	Y
46	43.29	46.85	44.76	0.021	Y
47	43.09	46.50	44.96	0.019	Y
48	43.48	45.80	44.65	0.014	Y
49	43.15	45.78	44.62	0.016	Y
50	43.13	46.07	44.92	0.018	Y
51	43.89	46.18	45.17	0.014	Y
52	43.33	45.81	45.17	0.011	Y
53	42.87	45.80	44.77	0.018	Y
54	43.07	45.66	44.52	0.014	Y
55	43.13	45.75	45.05	0.010	Y
56	43.95	45.23	44.64	0.008	Y
57	43.62	45.47	44.39	0.009	Y
58	43.71	45.68	44.75	0.013	Y
59	43.25	45.15	44.19	0.009	Y
60	43.15	44.64	43.79	0.008	Y
61	42.96	44.38	43.78	0.007	Y
62	41.93	43.74	42.86	0.012	Y
63	41.80	43.81	42.96	0.011	Y
64	42.33	44.11	43.18	0.011	Y
65	42.03	44.07	43.03	0.014	Y
66	41.91	43.73	42.89	0.013	Y

TABLE 4
FLOW RATE SUMMARY FOR ALL RUNS

Run #	Min	Max	Average	COV	Compliance
	gpm	gpm	gpm		(COV< 0.1)
67	42.12	47.73	42.84	0.018	Y
68	39.06	43.36	42.41	0.016	Y
69	41.71	42.74	42.13	0.006	Y
70	40.87	43.15	42.31	0.012	Y
71	40.63	42.02	41.47	0.009	Y
72	40.25	42.02	41.02	0.014	Y
73	40.35	42.51	41.39	0.013	Y
74	40.30	41.36	40.62	0.006	Y
75	40.01	41.52	40.79	0.010	Y
76	39.78	40.88	40.24	0.006	Y
Mean	**43.23**	**45.83**	**44.66**	**0.014**	**Y**

4.2 Water Temperature

For the first five runs, water temperature was measured by a thermometer every ten minutes during the run. Temperatures during subsequent runs were also recorded every minute by a HOBO water level logger (U20L-04) to improve QA/QC. On average, the water temperature during testing was 60 degrees Fahrenheit, with a maximum water temperature of 66 degrees Fahrenheit. In all cases, the water temperature met the NJDEP Filter Protocol requirement by being below 80 degrees Fahrenheit (**Figure 9**).

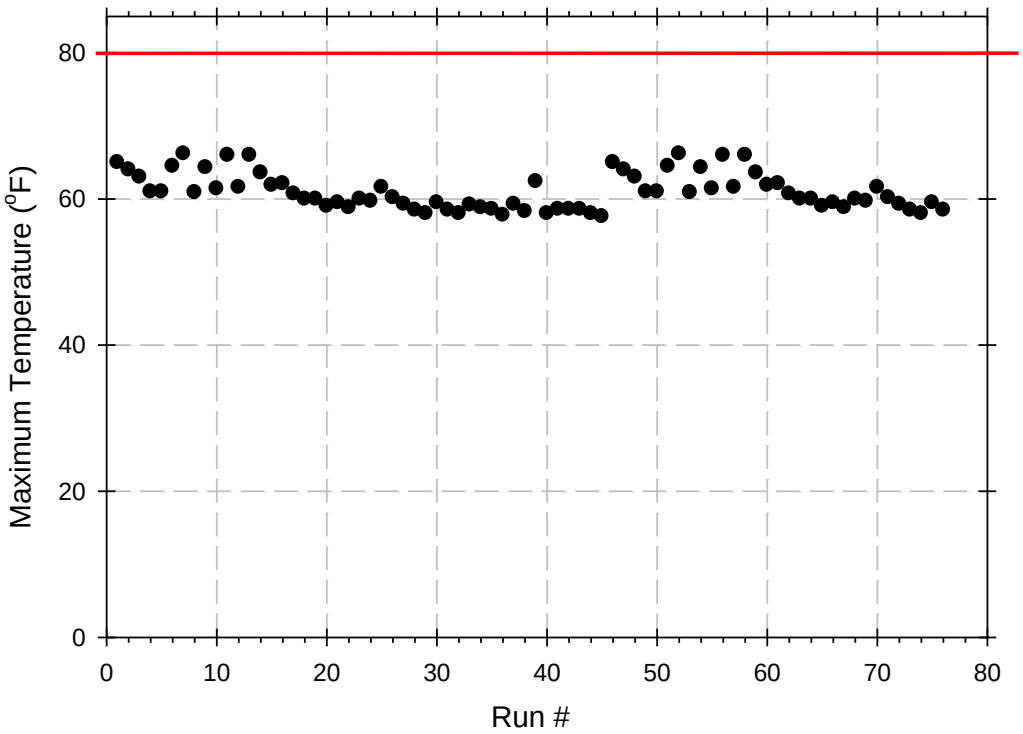

Figure 9 Maximum Temperature (Fahrenheit) for Each Run

4.3 Sediment Concentration and Removal Efficiency

The target influent sediment concentration ranged from 180 to 200 mg/L with a COV of 0.10. The average influent sediment concentration for the 70 runs was 202.5 mg/L. This is within the target range 200 ± 20 mg/L (**Table 5**). Municipal tap water was used as the source during testing. An average background TSS was calculated for each run and the influent and effluent values were adjusted from background to calculate the removal efficiencies. For all 70 runs, the average background TSS was less than 6.6 mg/L. Overall, the average background TSS was 1.2 mg/L, far below the 20 mg/L limit.

During the 70 runs, there were four occasions (Specifically runs #55, #57, #68 and #70) where there was a brief interruption in the consistency of the dosing due to a partial restriction/ clogging of the peristaltic pump by unanticipated contaminant. This led to run times that significantly exceeded the normal range (59-64 minutes). To resolve this, the pump was briefly (2-3 seconds) reversed during the run, later after the completion of the run the tubing was rinsed out with clean water. During Run 55, we attributed an extended run time and low feed rate from the slurry tank to a clog in the injection line. The situation was rectified prior to the next run.

The average effluent TSS over 70 runs was 33.3 mg/L, with averages above 41 mg/L after run 70. The average drain-down TSS for the 70 runs was 29.6 mg/L. The drain-down volume was calculated by multiplying the area of the test tank by the water level at the end of the run. The water volume was then corrected for the displacement volume of the filter. Sediment concentrations of background, influent, effluent and drain-down are summarized in **Table 6**.

TABLE 5
INFLUENT SEDIMENT CONCENTRATION SUMMARY FOR ALL RUNS

Run #	Min	Max	Mean	COV	Compliance
	mg/L	mg/L	mg/L		(COV< 0.1)
1	182.3	217.9	203.4	0.059	Y
2	187.3	223.9	208.1	0.081	Y
3	203.8	222.8	209.9	0.033	Y
4	178.9	216.5	201.8	0.070	Y
5	184.6	224.8	206.6	0.069	Y
6	168.9	245.4	203.6	0.149	N
7	204.6	220.1	212.9	0.032	Y
8	202.9	218.2	210.4	0.027	Y
9	212.3	225.3	217.4	0.023	Y
10	206.8	217.1	211.9	0.018	Y
11	200.7	221.0	212.1	0.039	Y
12	192.4	219.1	206.7	0.048	Y
13	209.7	215.4	212.9	0.010	Y
14	203.2	214.0	209.3	0.024	Y
15	190.1	209.6	196.0	0.042	Y
16	195.2	217.8	209.3	0.036	Y
17	194.0	221.8	207.8	0.047	Y
18	200.1	217.0	207.6	0.039	Y
19	178.7	219.0	198.5	0.083	Y
20	184.6	205.2	197.6	0.037	Y
21	195.5	219.0	204.9	0.044	Y
22	189.6	216.3	204.3	0.049	Y
23	190.8	215.4	206.3	0.044	Y
24	191.1	218.3	206.3	0.048	Y

TABLE 5
INFLUENT SEDIMENT CONCENTRATION SUMMARY FOR ALL RUNS

Run #	Min	Max	Mean	COV	Compliance
	mg/L	mg/L	mg/L		(COV< 0.1)
25	191.5	225.0	203.2	0.063	Y
26	187.8	221.7	205.7	0.071	Y
27	188.7	221.4	204.1	0.059	Y
28	200.1	212.8	205.1	0.024	Y
29	196.2	220.3	207.3	0.047	Y
30	191.3	208.4	198.9	0.038	Y
31	184.5	216.8	203.1	0.061	Y
32	191.2	212.9	204.3	0.044	Y
33	194.5	212.2	201.0	0.032	Y
34	191.6	226.8	209.8	0.072	Y
35	183.2	201.5	194.9	0.040	Y
36	186.9	225.0	208.8	0.074	Y
37	191.2	203.7	197.6	0.022	Y
38	190.9	225.1	207.1	0.063	Y
39	183.9	211.5	195.3	0.050	Y
40	187.5	208.8	198.2	0.039	Y
41	187.0	213.3	202.3	0.054	Y
42	209.6	223.9	217.5	0.021	Y
43	190.4	207.4	200.6	0.031	Y
44	193.7	217.4	205.3	0.048	Y
45	201.0	221.4	210.0	0.042	Y
46	192.5	234.2	204.2	0.074	Y
47	191.4	211.5	201.4	0.044	Y
48	196.4	215.4	206.8	0.039	Y
49	193.7	213.2	203.8	0.039	Y
50	186.3	219.8	208.8	0.061	Y
51	189.9	210.9	200.6	0.040	Y
52	184.6	200.5	193.8	0.037	Y
53	191.2	208.1	197.4	0.040	Y
54	181.7	214.2	199.7	0.059	Y

TABLE 5
INFLUENT SEDIMENT CONCENTRATION SUMMARY FOR ALL RUNS

Run #	Min	Max	Mean	COV	Compliance
	mg/L	mg/L	mg/L		(COV< 0.1)
55	159.7	187.3	177.9	0.054	Y
56	189.2	216.9	199.9	0.060	Y
57	178.2	204.2	197.8	0.049	Y
58	187.5	221.0	202.2	0.054	Y
59	190.2	210.1	202.8	0.034	Y
60	185.3	214.9	199.8	0.055	Y
61	183.1	213.9	194.8	0.062	Y
62	198.2	205.5	202.3	0.014	Y
63	187.6	199.0	194.5	0.024	Y
64	185.0	202.0	197.8	0.032	Y
65	201.0	210.7	206.5	0.018	Y
66	191.7	214.6	205.1	0.042	Y
67	191.7	214.6	205.1	0.042	Y
68	183.2	217.7	195.0	0.064	Y
69	196.1	220.5	205.7	0.047	Y
70	193.3	217.9	206.5	0.047	Y
71	181.3	232.9	206.1	0.081	Y
72	193.8	222.7	205.9	0.055	Y
73	185.9	234.3	210.5	0.084	Y
74	190.3	222.3	205.1	0.054	Y
75	167.2	209.3	198.5	0.082	Y
76	186.3	215.0	201.3	0.058	Y
Mean	191.0	215.6	203.6	0.047	Y

TABLE 6

SEDIMENT CONCENTRATIONS AND REMOVAL EFFICIENCY SUMMARY FOR ALL RUNS

Run #	Background TSS	Adjusted IN-TSS	Adjusted EFF-TSS	DrainDown-TSS	Drain-Down Volume	Flow Rate	Duration	Removal
	(mg/L)	(mg/L)	(mg/L)	(mg/L)	gallons	gpm	min	%
Blank	0.0	0.2	0.0	0.3	99.0	45.86	60	n/a
1	0.0	203.4	27.6	23.7	99.0	45.83	63	86.0
2	0.0	208.1	30.7	28.8	103.4	46.69	63	84.8
3	0.0	209.9	29.4	27.4	104.6	46.47	62	85.5
4	0.0	201.8	25.1	24.9	104.6	45.80	65	87.1
5	0.0	206.6	29.7	23.1	100.2	46.06	60	85.2
6	4.2	199.4	31.0	31.3	97.0	46.00	61	83.9
7	1.0	211.9	27.9	28.7	97.0	43.59	62	86.3
8	0.0	210.4	31.1	25.1	102.8	44.52	62	84.8
9	0.7	216.7	33.7	25.3	103.2	45.57	62	84.0
10	3.3	208.6	30.3	28.8	103.2	43.18	61	84.9
11	6.6	205.5	26.5	30.9	103.2	46.84	62	86.6
12	2.7	204.0	27.5	27.3	103.6	45.60	61	86.0
13	2.3	210.6	31.2	27.4	102.4	45.71	63	84.7
14	2.6	206.7	32.8	27.2	102.8	44.33	60	83.6
15	2.5	193.5	27.2	20.2	102.8	48.25	60	85.6
16	0.2	209.1	33.1	25.4	103.6	47.76	61	83.7
17	1.8	206.0	33.0	25.2	103.2	46.92	59	83.5
18	0.3	207.3	32.5	26.3	102.8	47.54	61	83.9
19	1.0	197.5	32.6	26.7	103.2	44.06	62	83.0
20	0.0	197.6	34.1	27.9	102.4	47.12	61	82.2
21	0.0	204.9	30.9	30.7	102.8	47.35	62	84.4
22	0.7	203.6	34.5	19.1	102.0	46.38	61	82.7
23	5.3	201.0	33.1	33.3	102.8	46.32	63	82.9
24	5.3	201.0	33.3	26.6	102.0	44.58	62	82.9
25	3.0	200.2	36.1	27.0	103.7	45.00	64	81.5
26	4.0	201.7	31.8	24.9	104.5	46.59	62	83.8
27	3.2	200.9	31.3	30.6	104.1	45.78	61	83.9
28	2.3	202.8	36.4	29.9	104.5	44.71	63	81.5

TABLE 6

SEDIMENT CONCENTRATIONS AND REMOVAL EFFICIENCY SUMMARY FOR ALL RUNS

Run #	Background TSS	Adjusted IN-TSS	Adjusted EFF-TSS	DrainDown-TSS	Drain-Down Volume	Flow Rate	Duration	Removal
	(mg/L)	(mg/L)	(mg/L)	(mg/L)	gallons	gpm	min	%
29	1.3	206.0	33.5	31.9	104.1	44.80	63	83.2
30	0.5	198.4	37.1	26.7	104.5	45.68	61	80.8
31	1.5	201.6	36.7	29.2	104.9	46.34	62	81.3
32	0.9	203.4	37.7	28.2	102.5	44.98	60	80.9
33	0.3	200.7	37.5	31.6	104.1	44.68	62	80.7
34	2.3	207.5	33.6	34.6	104.5	44.57	61	83.2
35	5.7	189.2	33.4	31.7	104.1	45.24	62	81.7
36	1.5	207.3	36.7	26.6	104.1	44.59	60	81.8
37	0.0	197.6	38.8	31.7	102.0	44.04	62	79.8
38	0.0	207.1	37.1	38.2	104.1	45.19	62	81.4
39	0.0	195.3	34.3	35.7	100.4	45.58	63	81.8
40	0.4	197.8	37.5	31.2	101.2	44.72	61	80.5
41	0.2	202.1	35.3	31.1	101.6	44.18	62	82.0
42	0.0	217.5	35.2	28.1	103.0	45.94	62	83.3
43	1.7	198.9	34.6	27.7	101.6	44.33	62	82.1
44	3.4	201.9	33.7	26.8	102.1	44.83	61	82.8
45	1.3	208.7	36.1	23.8	102.5	44.36	62	82.3
46	2.2	202.0	33.7	24.9	102.1	44.76	61	82.9
47	6.6	194.8	32.5	23.3	102.5	44.96	62	82.9
48	1.9	204.9	35.3	15.3	102.5	44.65	62	82.5
49	1.8	202.0	31.9	14.8	102.1	44.62	61	83.9
50	0.8	208.0	33.4	24.1	101.6	44.92	63	83.5
51	1.8	198.8	32.5	38.8	100.3	45.17	63	83.0
52	0.9	192.9	34.5	29.6	102.1	45.17	62	81.6
53	0.0	197.4	30.1	27.5	102.1	44.77	62	84.2
54	0.6	199.1	33.3	32.8	102.1	44.52	64	82.7
55	2.7	175.2	28.5	27.9	101.2	45.05	74	83.2
56	1.6	198.3	33.0	30.3	101.6	44.64	65	82.8
57	0.8	197.0	30.7	30.2	102.1	44.39	68	83.9

TABLE 6

SEDIMENT CONCENTRATIONS AND REMOVAL EFFICIENCY SUMMARY FOR ALL RUNS

Run #	Background TSS (mg/L)	Adjusted IN-TSS (mg/L)	Adjusted EFF-TSS (mg/L)	DrainDown-TSS (mg/L)	Drain-Down Volume gallons	Flow Rate gpm	Duration min	Removal %
58	0.0	202.2	35.6	32.9	102.5	44.75	59	81.8
59	0.9	201.9	31.5	35.9	103.4	44.19	62	83.7
60	0.0	199.8	35.3	37.3	104.6	43.79	61	81.6
61	0.0	195.1	34.4	35.3	105.5	43.78	62	81.7
62	0.0	202.3	34.3	36.9	106.2	42.86	62	82.3
63	0.0	194.5	35.4	35.2	107.1	42.96	61	81.1
64	0.4	197.4	31.3	37.4	106.9	43.18	63	83.4
65	0.0	206.5	34.2	37.6	107.4	43.03	61	82.7
66	0.0	205.1	31.0	38.6	108.0	42.89	63	84.1
67	2.7	202.4	31.6	38.6	108.8	42.84	65	83.6
68	0.0	195.0	34.7	36.2	109.4	42.41	68	81.5
69	0.0	205.7	36.8	40.8	110.0	42.13	60	81.2
70	0.0	206.5	36.2	40.4	110.1	42.31	69	81.7
71	0.1	206.0	40.5	41.4	110.0	41.47	64	79.5
72	0.0	205.9	44.7	41.9	115.3	41.02	65	77.4
73	0.0	210.5	47.4	44.3	119.0	41.39	62	76.5
74	0.0	205.1	41.4	41.6	122.2	40.62	63	78.8
75	0.0	198.5	41.0	39.3	127.4	40.79	58	78.3
76	0.0	201.3	42.9	47.9	136.4	40.24	61	77.4
Mean	**1.4**	**199.4**	**32.6**	**29.1**	**103.4**	**45.0**	**62.3**	**83.1**

As shown in the summary table (**Table 6**), the BayFilter™ EMC 545 demonstrated an average sediment removal efficiency of 83.1% over the course of 70 test runs (excluding run 6).

4.4 Sediment Mass Loading

To maintain consistency during testing, sediment mass loading was maintained at 2044 grams (4.5 lbs) per run. Removal efficiencies were above 80% and driving head was stable before the sediment load reached 300 lb (**Figures 10** and **11**). Flow rates through the filter, similarly, remained fairly constant until the sediment load reached approximately 275 lb, at which point a gradual decrease became apparent (**Figure 12**). After run 70, the average flow rate through the

filter started dropping into the range of 90% of the target flow rate, and as a result, testing was concluded. The total sediment mass load delivered to the BayFilter for 70 runs was 315 lbs; the total sediment captured was 262 lbs.

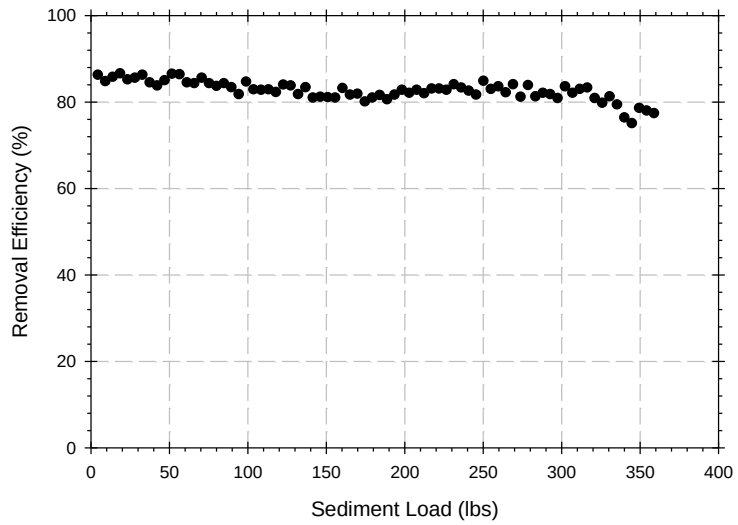

Figure 10 Removal Efficiency vs. Sediment Mass Loading

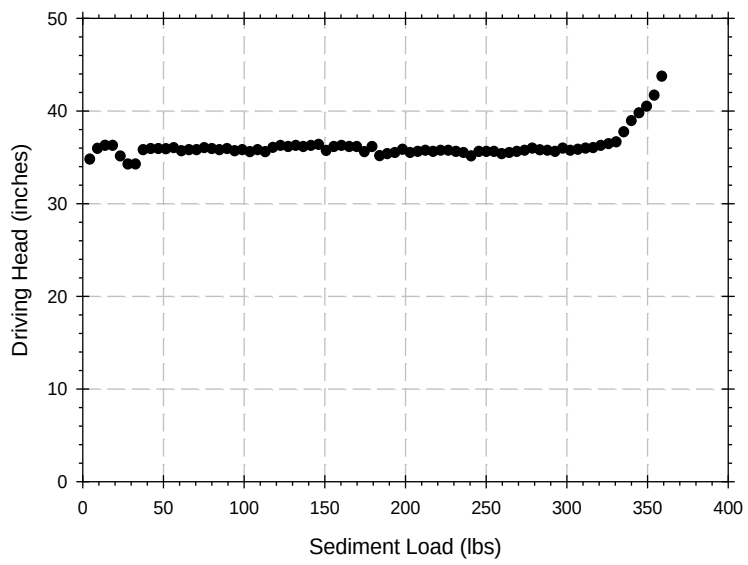

Figure 11 Observed Driving Head vs. Sediment Mass Loading

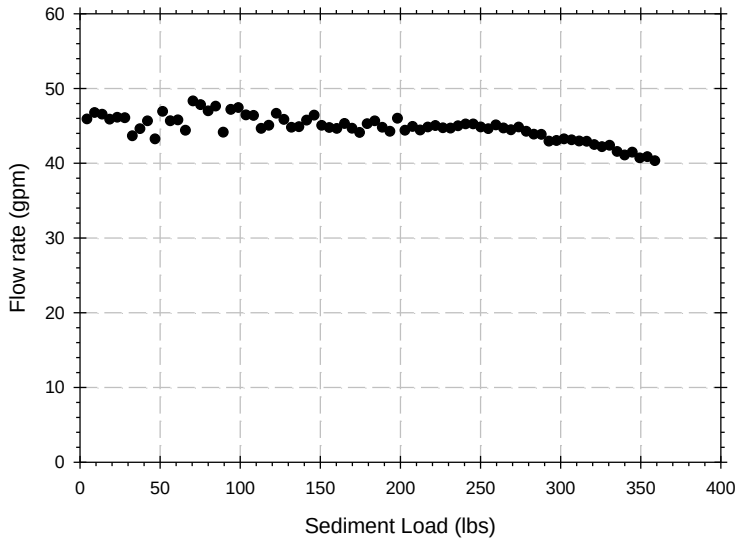

Figure 12 Flow Rate vs. Sediment Mass Loading

4.5 Replicate Samples

Four replicate samples (2 influent and 2 effluent samples) were obtained during each run at randomly selected collection intervals to ensure that the sampling method was yielding consistent results. In total, 96% of pairings resulted in a relative percent difference (RPD) below 0.1.

Table 7 summarizes TSS concentrations and RPDs for replicated effluent samples, while **Table 8** provides data for influent samples. See **Section 4.6** for replicated samples analyzed by an outside lab.

TABLE 7

REPLICATE EFFLUENT TSS SAMPLES

Run #	Time A Sample 1	Time A Sample 2	Time B Sample 1	Time B Sample 2	RPD (Time A)	RPD (Time B)
	mg/L	mg/L	mg/L	mg/L	(< 0.1)	(< 0.1)
1	28.9	28.5	27.7	28.3	0.013	0.021
2	31.9	30.9	29.6	29.4	0.031	0.009
3	29.4	29.6	26.9	25.9	0.005	0.037
5	35.0	33.1	30.7	29.8	0.056	0.031
7	33.9	32.5	24.8	23.8	0.041	0.038
9	35.9	37.5	34.2	33.8	0.044	0.011
10	33.6	34.3	31.3	33.2	0.022	0.060

TABLE 7

REPLICATE EFFLUENT TSS SAMPLES

Run #	Time A Sample 1 mg/L	Time A Sample 2 mg/L	Time B Sample 1 mg/L	Time B Sample 2 mg/L	RPD (Time A) (< 0.1)	RPD (Time B) (< 0.1)
11	35.2	34.9	32.7	36.4	0.009	0.107
13	37.2	37.3	32.0	33.6	0.002	0.049
14	33.3	31.1	35.1	32.0	0.068	0.093
16	31.5	30.1	32.7	32.6	0.046	0.004
18	30.5	29.8	29.6	30.9	0.023	0.042
19	33.9	30.5	33.2	33.0	0.106	0.006
20	36.9	37.7	30.9	31.0	0.022	0.003
21	28.2	29.5	32.5	30.3	0.045	0.070
23	38.8	40.7	37.8	40.5	0.048	0.070
24	39.7	40.4	38.4	38.3	0.017	0.002
25	38.7	38.7	36.6	35.1	0.000	0.042
26	37.5	37.5	35.5	36.0	0.001	0.014
27	40.2	39.1	32.8	35.7	0.029	0.086
29	31.8	30.3	31.8	33.0	0.048	0.036
30	35.6	36.6	38.5	40.3	0.027	0.045
31	38.4	37.4	36.6	39.6	0.025	0.080
33	35.4	34.1	37.6	37.3	0.036	0.007
34	33.2	34.6	34.7	34.9	0.042	0.007
35	39.5	40.0	38.5	40.9	0.012	0.060
36	37.7	37.1	39.0	39.0	0.017	0.001
37	38.3	38.1	38.2	35.7	0.008	0.068
38	40.5	40.0	36.3	36.7	0.011	0.013
39	34.1	36.1	33.9	34.3	0.059	0.011
40	33.0	32.7	40.3	38.5	0.010	0.047
41	35.1	37.3	39.0	41.0	0.060	0.048
42	34.3	31.3	36.0	36.9	0.093	0.026
43	38.4	38.7	38.2	36.7	0.008	0.041
45	41.9	38.9	34.1	35.1	0.073	0.028
46	38.3	36.6	36.3	38.7	0.046	0.064
47	42.5	43.0	36.6	34.4	0.010	0.062
48	38.9	35.9	34.7	34.7	0.081	0.001
49	34.6	32.4	30.9	31.0	0.068	0.001
50	33.7	34.0	34.5	36.0	0.008	0.044
51	36.0	36.6	32.2	33.6	0.014	0.044

TABLE 7

REPLICATE EFFLUENT TSS SAMPLES

Run #	Time A Sample 1 mg/L	Time A Sample 2 mg/L	Time B Sample 1 mg/L	Time B Sample 2 mg/L	RPD (Time A) (< 0.1)	RPD (Time B) (< 0.1)
52	36.7	38.6	36.5	33.3	0.051	0.092
54	31.3	33.7	32.9	29.7	0.074	0.101
55	31.5	29.2	29.2	29.4	0.076	0.007
56	34.4	33.3	40.0	41.8	0.032	0.045
57	32.0	31.6	34.7	32.8	0.012	0.056
58	37.7	36.6	39.1	39.4	0.029	0.006
59	28.6	30.9	32.2	33.3	0.077	0.034
60	32.6	32.0	38.9	37.1	0.019	0.047
61	32.6	32.5	36.4	34.7	0.002	0.047
62	32.4	35.2	34.9	35.3	0.081	0.010
63	35.2	33.3	37.0	36.9	0.054	0.003
64	32.9	30.0	30.5	30.7	0.092	0.004
65	37.3	38.0	37.2	39.9	0.019	0.071
66	29.1	28.7	33.2	31.4	0.013	0.056
67	36.2	36.1	34.5	36.3	0.003	0.052
68	35.3	34.8	34.8	36.2	0.013	0.037
69	37.6	37.3	41.2	40.5	0.009	0.018
70	39.3	39.7	38.1	38.9	0.012	0.019
71	40.4	40.9	42.2	39.3	0.012	0.070
72	39.5	42.5	45.4	47.8	0.073	0.051
73	52.1	53.1	52.0	49.4	0.018	0.052
74	39.0	40.5	44.9	46.3	0.039	0.029
75	38.5	40.8	46.1	42.1	0.058	0.091
76	40.9	41.9	44.1	44.0	0.022	0.002

TABLE 8

REPLICATE INFLUENT TSS SAMPLES

Run #	Time A Sample 1	Time A Sample 2	Time B Sample 1	Time B Sample 2	RPD (Time A)	RPD (Time B)
	mg/L	mg/L	mg/L	mg/L	(< 0.1)	(< 0.1)
1	208.5	222.5	206.8	222.6	0.065	0.073
2	187.8	211.7	187.3	206.4	0.119	0.097
3	203.8	211.2	222.8	241.2	0.036	0.079
5	184.6	213.5	224.8	224.3	0.145	0.002
7	204.6	195.1	210.5	204.9	0.048	0.027
9	212.3	197.0	216.6	221.7	0.075	0.023
10	211.4	212.8	210.6	208.6	0.007	0.009
11	211.5	215.0	200.7	217.9	0.017	0.082
13	212.2	212.9	209.7	206.4	0.003	0.016
14	214.0	210.6	209.4	218.4	0.016	0.042
16	213.2	216.0	209.1	211.9	0.013	0.013
18	217.0	212.4	200.1	203.3	0.021	0.015
19	207.0	205.5	213	199.1	0.007	0.067
20	199.3	209.5	195.5	187.6	0.050	0.041
21	198.4	214.8	212.2	199.6	0.080	0.061
23	204.0	201.4	215.4	212.4	0.013	0.014
24	191.1	196.5	206.8	206.2	0.028	0.003
25	558.5	450.1	200.6	194.9	0.215	0.029
26	217.8	216.4	216.2	212.1	0.006	0.019
27	214.1	214.5	202.1	209.7	0.002	0.037
29	217.8	197.5	220.3	218.4	0.098	0.009
30	208.2	203.8	195.4	215.5	0.021	0.098
31	204.0	196.2	184.5	197.8	0.039	0.069
33	199.3	201.7	195.5	191.7	0.012	0.020
34	191.6	195.5	226.8	216.6	0.020	0.046
35	196.5	194.3	200.0	196.6	0.011	0.017
36	215.5	213.7	225.0	202.8	0.008	0.104
37	194.4	198.2	203.7	203.5	0.019	0.001
38	198.0	185.7	225.1	209.8	0.064	0.070
39	183.9	190.0	194.0	191.5	0.033	0.013
40	192.7	194.8	187.5	204.5	0.011	0.087
41	207.8	200.2	204.4	197.3	0.037	0.036
42	218.0	219.7	219.5	217.2	0.008	0.010

TABLE 8

REPLICATE INFLUENT TSS SAMPLES

Run #	Time A Sample 1	Time A Sample 2	Time B Sample 1	Time B Sample 2	RPD (Time A)	RPD (Time B)
	mg/L	mg/L	mg/L	mg/L	(< 0.1)	(< 0.1)
43	205.8	192.5	201.2	214.0	0.066	0.062
45	202.5	211.1	200.0	216.1	0.042	0.077
46	210.4	201.2	198.9	206.5	0.045	0.038
47	211.1	208.6	203.5	207.7	0.012	0.020
48	207.3	204.1	193.7	204.2	0.015	0.053
49	201.2	206.4	219.8	207.2	0.026	0.059
50	206.8	201.9	195.1	186.8	0.024	0.043
51	187.3	198.6	191.0	194.8	0.059	0.019
52	193.1	204.3	209.1	208.1	0.056	0.004
54	180.0	175.2	180.9	177.6	0.027	0.018
55	192.6	181.5	189.2	189.5	0.059	0.002
56	178.2	198.5	201.1	213.2	0.108	0.058
57	200.4	181.4	221.0	212.0	0.099	0.042
58	202.5	207.4	202.5	207.5	0.024	0.024
59	210.1	199.4	198.6	208.2	0.052	0.047
60	188.1	192.4	213.9	224.3	0.023	0.048
61	203.1	206.7	199.4	199.5	0.017	0.001
62	190.0	197.8	199.0	190.3	0.041	0.044
63	199.0	206.5	200.5	202.6	0.037	0.011
64	210.7	198.3	207.7	211.8	0.061	0.020
65	198.0	202.7	191.7	199.1	0.023	0.038
66	198.0	202.7	191.7	199.1	0.023	0.038
67	198.7	200.0	185.8	185.3	0.006	0.003
68	203.3	197.3	199.4	211.3	0.030	0.058
69	196.2	200.3	217.9	217.8	0.021	0.000
70	181.3	182.0	212.3	220.1	0.004	0.036
71	193.8	211.7	209.2	196.1	0.088	0.065
72	217.8	235.1	214.0	205.0	0.076	0.043
73	197.4	213.0	190.3	208.9	0.076	0.093
74	195.9	214.7	209.3	210.1	0.091	0.004
75	215.0	202.4	210.7	216.4	0.060	0.027
76	205.8	192.5	201.2	214.0	0.066	0.062

4.6 Outside Analysis of Replicates

At random intervals during the testing process, the four replicate samples taken during the run were sent to an outside lab for TSS analysis instead of being examined in-house (overseen by Boggs Environmental, Inc.). Fredericktowne Labs, Inc., processed samples in accordance with ASTM D3977-97 protocol at their facility in Meyersville, MD.

TABLE 9

REPLICATE SAMPLES BY MASWRC AND FREDERICKTOWNE LAB

Run #	MASWRC Time A	Fredericktowne Time A	MASWRC Time B	Fredericktowne Time B	RPD (Time A)	RPD (Time B)
	mg/L	mg/L	mg/L	mg/L	(< 0.1)	(< 0.1)
	Effluent samples					
4	27.2	30	26.5	23	0.097	0.142
6	36.1	21	35.3	21	0.529	0.508
8	31.0	29	27.4	25	0.066	0.090
12	28.5	26	25.4	23	0.092	0.098
15	33.5	32	24.8	19	0.047	0.265
17	33.0	30	29.7	27	0.095	0.094
22	37.3	36	35.5	33	0.036	0.073
28	38.6	42	37.1	34	0.084	0.086
32	38.4	40	39.7	39	0.041	0.018
44	38.2	41	35.0	32	0.071	0.089
53	24.9	22	30.2	28	0.123	0.074
	Influent samples					
4	178.9	200	215.7	190	0.111	0.126
6	171.4	180	225.8	200	0.049	0.122
8	206.8	200	202.9	190	0.033	0.066
12	192.4	180	197.8	180	0.067	0.094
15	191.8	180	190.1	180	0.063	0.054
17	194.0	180	201.7	190	0.075	0.060
22	189.6	200	208.0	220	0.054	0.056
28	201.9	210	212.8	210	0.040	0.013
32	212.9	220	191.2	200	0.033	0.045
44	214.6	200	206.1	200	0.071	0.030
53	192.4	200	191.2	200	0.039	0.045

4.7 Sediment Feed Samples

As shown in **Table 10**, sediment feed samples were consistent and all 76 runs had COVs below 0.1.

TABLE 10

SEDIMENT FEED SAMPLE MASS FOR ALL RUNS

Run #	Sample A	Sample B	Sample C	Average	COV
	grams	grams	grams	grams	(< 0.1)
1	11.55	11.93	12.05	11.84	0.022
2	11.91	11.58	12.19	11.89	0.026
3	11.68	11.94	12.11	11.91	0.018
4	11.39	11.70	11.90	11.66	0.022
5	11.59	11.88	11.96	11.81	0.016
6	11.55	11.31	11.74	11.53	0.019
7	11.71	11.86	11.91	11.83	0.009
8	11.82	11.68	11.66	11.72	0.007
9	11.85	12.01	12.09	11.99	0.010
10	11.62	11.86	11.97	11.82	0.015
11	11.91	11.62	11.77	11.77	0.012
12	11.89	11.84	11.99	11.90	0.006
13	11.66	11.71	11.82	11.73	0.007
14	11.94	11.83	12.06	11.94	0.010
15	11.59	11.44	11.67	11.57	0.010
16	12.02	11.83	12.19	12.01	0.015
17	12.10	11.94	11.83	11.96	0.012
18	12.03	11.81	11.86	11.90	0.010
19	11.65	11.90	11.82	11.79	0.011
20	11.46	11.66	11.71	11.61	0.012
21	11.61	11.88	12.06	11.85	0.019
22	11.43	11.69	11.97	11.69	0.023
23	11.61	11.84	11.95	11.80	0.014
24	11.49	11.59	11.72	11.60	0.010
25	11.46	11.68	11.91	11.68	0.019
26	11.69	11.57	11.80	11.69	0.010
27	11.86	11.46	11.64	11.65	0.017

TABLE 10

SEDIMENT FEED SAMPLE MASS FOR ALL RUNS

Run #	Sample A	Sample B	Sample C	Average	COV
	grams	grams	grams	grams	(< 0.1)
28	12.01	11.87	12.27	12.05	0.017
29	11.70	11.52	11.97	11.73	0.019
30	11.75	11.88	11.96	11.86	0.009
31	11.81	11.65	11.46	11.64	0.015
32	11.74	11.83	11.52	11.70	0.013
33	11.50	11.65	11.73	11.63	0.010
34	11.71	11.55	12.11	11.79	0.024
35	11.86	11.61	11.81	11.76	0.011
36	11.64	11.99	11.93	11.85	0.015
37	11.59	11.78	11.67	11.68	0.008
38	11.70	11.74	12.10	11.85	0.019
39	11.64	11.43	11.89	11.65	0.020
40	11.66	11.81	11.89	11.79	0.010
41	11.34	11.70	11.75	11.60	0.019
42	11.94	12.17	12.42	12.17	0.020
43	11.62	11.49	11.84	11.65	0.015
44	11.88	11.70	11.81	11.80	0.008
45	11.65	12.21	12.01	11.96	0.024
46	11.94	11.85	12.29	12.02	0.019
47	11.54	11.85	11.93	11.77	0.017
48	11.97	11.79	11.91	11.89	0.008
49	11.66	11.93	11.76	11.78	0.011
50	11.48	11.99	12.33	11.93	0.036
51	11.66	11.80	11.96	11.81	0.012
52	11.64	11.87	11.95	11.82	0.013
53	11.53	11.71	11.84	11.69	0.013
54	11.87	11.72	12.05	11.88	0.014
55	11.46	11.09	10.35	10.97	0.051
56	11.66	11.77	11.90	11.78	0.010
57	11.50	11.83	11.63	11.65	0.014

TABLE 10

SEDIMENT FEED SAMPLE MASS FOR ALL RUNS

Run #	Sample A	Sample B	Sample C	Average	COV
	grams	grams	grams	grams	(< 0.1)
58	11.66	11.87	12.09	11.87	0.018
59	11.84	12.00	11.87	11.90	0.007
60	11.72	11.57	11.91	11.73	0.014
61	11.50	11.36	12.02	11.63	0.030
62	11.66	11.57	11.74	11.66	0.007
63	11.36	11.50	11.66	11.51	0.013
64	11.42	11.65	11.80	11.62	0.017
65	11.69	11.93	11.96	11.86	0.012
66	11.59	11.85	11.95	11.80	0.015
67	11.86	11.58	11.78	11.74	0.012
68	11.69	11.31	11.03	11.35	0.029
69	11.74	11.65	11.96	11.78	0.013
70	11.57	11.86	11.97	11.80	0.017
71	11.28	11.69	12.17	11.71	0.038
72	11.54	12.24	11.92	11.90	0.029
73	12.01	12.33	12.12	12.15	0.013
74	11.86	11.61	12.05	11.84	0.019
75	11.79	11.99	11.41	11.73	0.025
76	11.61	11.68	11.86	11.72	0.011

5. Design Limitations

BaySaver Technologies, LLC, provides engineering support to all clients. Each system is designed and sized according to anticipated flow rate, load rating, and system depth at the installation site. All site and design constraints are discussed during the design and manufacturing process.

Required Soil Characteristics

The BayFilter and its internal components are delivered to the job site to be housed in a pre-cast concrete structure. During the pre-casting design process, soil characteristics including corrosiveness, top and lateral loading, and ground water must be addressed. The BayFilter system can be used in all soil types. A copy of the geotechnical report along with surface loading requirements must be reviewed and verified during the design process.

Slope

The BayFilter is typically installed on a 0% slope or flat installation grade. In general, it is recommended that the pipe slope into the system not exceed 20%. Slopes in excess of 20% could cause increased velocities which could affect the turbulence into the filter bay. In applications where slopes are greater than 20%, a means of reducing influent velocity should be implemented.

The slope of the finish surface at the installation site does not affect the BayFilter system, as it is situated below-ground. Risers can be used to bring access to the system up to the finish surface. In some configurations, the BayFilter system can be installed with a built-in curb or drop inlet.

Maximum Flow Rate

Maximum treatment flow rate depends on model size. The BayFilter will be sized based on the NJCAT tested hydraulic loading rate of 0.5 gpm/ft^2 filter surface area.

Maintenance Requirements

The lifespan and maintenance needs of the BayFilter system depend on the sediment load and individual site conditions. Detailed requirements can be found in **Section 6**.

Driving Head

The minimum driving head to start the BayFilter operation will vary depending on the site specific configuration and BayFilter cartridge type (i.e., EMC vs Low Profile EMC). The minimum head varies based on the height of the cartridge (minimum heads are 30”, 28”, and 18” to start the filter cartridge flowing). Since the cartridge is flow limited through the use of a flow restricting orifice placed on the filter cartridge outlet, there is no maximum head restriction. Flow disk diameter opening will affect the driving head for a system and BaySaver’s Engineering Department can assist in finding ideal driving head required based on an individual site’s requirements. Design support is given by BaySaver for each project, and site-specific drawings (cut sheets) are provided that show pipe inverts, finish surface elevation, and peak treatment and maximum flow rates through the filter unit.

For this NJCAT verification testing, a cartridge configuration with a flow restriction disk with a 1.42-inch diameter opening required a driving head of approximately 36” to maintain a treatment flow rate of 45.0 gpm.

Installation Limitations

BaySaver provides contractors with instructions prior to delivery, and onsite assistance is available from the installation technician during delivery and installations. Pick weights and lifting details are also provided prior to delivery to ensure that the contractor is able to prepare the appropriate equipment on site.

Configurations

The BayFilter system is available in various configurations and can be installed on- or offline, although this verification pertains to offline installation only. BaySaver recommends installing the BayFilter in an offline configuration which can be achieved without the use of an additional structure by using a three-chamber vault. When bypass occurs, flow is routed directly from the cell preceding the treatment cell to the outlet cell, thus fully bypassing the filter housing and preventing any scour or loss of captured pollutants from the filter housing.

Structural Load Limitations

The pre-cast structure that houses the BayFilter components must be designed to handle traffic loads where applicable.

Pre-treatment Requirements

With the BayFilter system pretreatment is optional. If pretreatment is installed, the owner can expect the filter cartridges to have a longer service life.

Limitations in Tailwater

Site-specific tailwater conditions will be assessed on each individual project. Tailwater conditions increase the amount of driving head required for optimal system operation. The manufacturer's internal protocols require that these conditions are discussed with the engineer of record and that a solution be implemented to adjust for any design variations caused by tailwater conditions at both treatment and bypass flow rates.

Depth to Seasonal High Water Table

Because the BayFilter system functions as a closed system, groundwater conditions do not affect its operation. High groundwater may cause buoyancy, and an anti-floatation ballast can be added to the structure to counteract this. Groundwater concerns must be addressed by the structural design of the concrete housing.

6. Maintenance Plans

The BayFilter™ system requires periodic maintenance to continue operating at design efficiency. The maintenance process is comprised of the removal and replacement of each BayFilter™ cartridge and the cleaning of the vault or manhole with a vacuum truck. The maintenance cycle of the BayFilter™ system is driven mostly by the actual solids load on the filter. The system should be periodically monitored to be certain it is operating correctly. Since storm water solids loads can be variable, it is possible that the maintenance cycle could be more or less than the projected duration for a given O&M cycle. BayFilter™ systems in volume-based applications are designed to treat the water quality volume (WQV) in 24-48 hours initially and drain down the storage system and filter bay within that time. Late in the operational cycle of the BayFilter™, the flow rate will diminish as a result of occlusion.

Inspection

When a BayFilter™ system is first installed, it is recommended that it be inspected every six (6) months for the first year and then on an annual basis. When the drain-down exceeds the regulated standard (greater than 24-48 hr. drain-down for a volume-based system, or the detention drain-down time, whichever is greater), maintenance should be performed. Filter cartridge replacement should also be considered when sediment levels are at or above the level of the manifold system. Replacement frequency can be determined by adhering to the initial sizing frequency given by the initial sizing of the system. Once actual sediment loading on-site is determined, a modified replacement frequency can be proposed to the site owner. Please contact the ADS/BaySaver Technologies Engineering Department for maintenance cycle estimations or assistance at 1.800.229.7283.

Maintenance Procedures

1. Remove the manhole covers and open all access hatches.
2. Before entering the system, make sure the air is safe per OSHA Standards or use a breathing apparatus. Use low O_2, high CO, or other applicable warning devices per regulatory requirements.
3. Using a vacuum truck, remove any liquid and sediments that can be removed prior to entry.
4. Using a small lift or the boom of the vacuum truck, remove the used cartridges by lifting them out.
5. Any BayFilter™ EMCs that cannot be readily lifted directly out of the vault should be removed from their location and carried to the lifting point using the trolley system installed in the vault (if applicable).
6. When all BayFilter™ EMCs are removed, remove the balance of the solids and water; then loosen the stainless clamps on the Fernco couplings in the pipe manifold; remove the drain pipes, as well. Carefully cap the manifold and the Ferncos, and rinse the floor, removing the balance of the collected solids.
7. Clean the manifold pipes; inspect, and reinstall.
8. Install the exchange BayFilter™ EMCs and close all covers.
9. The used BayFilter™ EMCs must be sent back to BaySaver Technologies for exchange/ recycling and credit on undamaged units.

7. Statements

The following signed statements from the manufacturer (BaySaver Technologies, LLC), third-party observer (Boggs Environmental Consultants, Inc.) and NJCAT are required to complete the NJCAT verification process.

In addition, it should be noted that this report has been subjected to public review (e.g. stormwater industry) and all comments and concerns have been satisfactorily addressed.

Date: 05-16-2016

To Whom It May Concern,

We are providing this letter as our statement certifying that the *New Jersey Department of Environmental Protection Laboratory Protocol to Assess Total Suspended Solids Removal by a Filtration Manufactured Treatment Device (January 2013)* has been strictly followed. In addition, we certify that all requirements and criteria were met or exceeded during testing of the BayFilter™ system.

If you have any questions, please contact us at your convenience.

Sincerely,

Daniel J. Figola, PE
General Manager,
BaySaver Technologies, LLC

Signature: Daniel J Figola Date: 5/16/2016

BOGGS
ENVIRONMENTAL CONSULTANTS

Middletown, MD & Morgantown, WV

Administrative Office:
200 W Main Street
Middletown, Maryland 21769
Office (301) 694-5687
Fax (301) 694-9799

July 26, 2016

BaySaver Technologies, LLC
1030 Deer Hollow Drive
Mount Airy, MD 21771
(301) 679-0640
dfigola@ads-pipe.com

ATTENTION Daniel Figola
General Manager

REFERENCE: Third Party Review of Testing Procedures for BayFilter™ Enhanced Media Cartridge (commercial unit model 545) at the Mid Atlantic Stormwater Research Center
1207 Park Ridge Drive, Mount Airy, MD 21771

BOGGS ENVIRONMENTAL CONSULTANTS, INC. (BEC) provided Third Party Review services for the testing of the BayFilter™ Enhanced Media Cartridge (EMC) (commercial unit model 545) to evaluate if the required testing meets certification standards established by the New Jersey Department of Environmental Protection (NJDEP).

LABORATORY TESTING PROCEDURES & METHODOLOGIES

The following three procedures and testing requirements were followed during the testing process of the BayFilter™ EMC -commercial unit model 545.

- *Procedure for Obtaining Verification of a Stormwater Manufactured Treatment Device from New Jersey Corporation for Advanced Technology*, For use in accordance with Stormwater Management Rules, N.J.A.C 7:8, January 25, 2013.
- *QAPP for BayFilter EMC, New Jersey Department of Environmental Protection Testing,* prepared by BaySaver Technologies, LLC, Prepared August 11, 2015, Revised September 2, 2015.
- Standard Test Method for Determining Sediment Concentration in Water Samples, ASTM Designation D 3977-97 (Reapproved 2007), ASTM International.

ONSITE OBSERVATION OF TESTING PROCEDURES

BEC was present at the Mid-Atlantic Stormwater Research Center (MASRC), at 1207 Park Ridge Drive, in Mount Airy, MD 21771, to observe the following:

- Setup of the testing equipment including verification of the placement of BayFilter™ EMC (commercial unit model 545) into the test tank;
- The mixing and establishment of a sediment blend that included 4 types of manufactured sands that when delivered to the mixing tank would result in influent TSS concentrations within the established range of approximately 200 mg/L and a particle size distribution specified and approved by NJDEP;
- Test runs to fine tune flow rates and to establish a consistent introduction of sediments into the mixing tank for run durations of approximately one hour;
- BEC established a Procedure Checklist to be used on each run to ensure and document the following: Selection of duplicate samples; Ensure that measurement devices are turned on and functioning; Verification that the correct measurements of dry sediments are added to the slurry tank and doser; Ensure that influent, effluent, background, and duplicate samples are collected at established intervals during the run; Recording of periodic manual flow rate tests; and, Tracking analysis after each run.

ONSITE OBSERVATION OF TESTING PROCEDURES (continued)

- Blank Run (without sediments) to establish a standard without sediments;
- Observation of Runs 1 through 76 from October 23, 2015 to January 27, 2016.
- During the first few runs, it was noted that the ISCO 750 area velocity meter installed in the effluent pipe was producing inconstant readings that varied greatly, despite a constant flow rate through the filter as measured manually. To improve instrumentation for recording flow rates, BaySaver installed a 60-degree v-notch weir downstream of the discharge pipe after Run 5. A calibrated ultrasonic sensor was mounted above the notched chamber of the weir and recorded a depth measurement every one minute during testing.
- BEC was present during all analysis for TSS in influent, effluent, blanks, and in-house duplicates for all 76 runs.

THIRD PARTY VERIFICATION & OPINIONS

Based on observations during the runs and the analysis of all TSS samples at the facility, BEC verified the following:

- That the testing of the BayFilter™ EMC 545 at the Mid-Atlantic Stormwater Research Center was conducted in accordance with the *Procedure for Obtaining Verification of a Stormwater Manufactured Treatment Device from New Jersey Corporation for Advanced Technology* and procedures established in BaySaver's QAPP for BayFilter EMC, New Jersey Department of Environmental Protection Testing, Prepared August 11, 2015, Revised September 2, 2015.
- The BayFilter™ EMC 545 demonstrated a sediment removal efficiency of 83% over the course of 70 test runs for almost a 3-month testing period from October 23, 2015 to January 20, 2015. Removal efficiencies below 80% were found only in the last 6 runs, when the average effluent TSS began climbing above 40 mg/L on Runs 71 to 76 and were not included in the calculation of the overall sediment removal efficiency.

Should you have any questions, contact our office at your earliest convenience.

Sincerely,
BOGGS ENVIRONMENTAL CONSULTANTS, INC.

William R. Warfel
Principal Environmental Scientist

Robin Maliszewskyj
Chemical Engineer

Center for Environmental Systems
Stevens Institute of Technology
One Castle Point
Hoboken, NJ 07030-0000

July 20, 2016

Titus Magnanao
NJDEP
Division of Water Quality
Bureau of Non-Point Pollution Control
401-02B
PO Box 420
Trenton, NJ 08625-0420

Dear Mr. Magnanao,

Based on my review, evaluation and assessment of the testing conducted on the BayFilter™ Enhanced Media Cartridge (commercial unit model 545) at the Mid-Atlantic Storm Water Research Center (MASWRC, a subsidiary of BaySaver), supervised by Boggs Environmental Consultants, Inc., the test protocol requirements contained in the "New Jersey Department of Environmental Protection Laboratory Protocol to Assess Total Suspended Solids Removal by a Filtration Manufactured Treatment Device" (NJDEP Filter Protocol, January 2013) were met or exceeded. Specifically:

Test Sediment Feed

MASWRC used test sediment that was a blend of four commercially available silica sediments. The blended test sediment, analyzed by MASWRC and two commercial testing laboratories, was found to meet the NJDEP particle size specification and was acceptable for use.

Removal Efficiency Testing

A total of 76 removal efficiency testing runs were completed in accordance with the NJDEP test protocol. The target flow rate and influent sediment concentration were 45 gpm and 200 mg/L respectively. Although the flow rates were still above 40 gpm (90% of the target flow), the removal efficiencies dropped below 80% after run 70. The results from the first 70 runs were used to calculate the overall removal efficiency and sediment capacity of the BayFilter™ 545.

The BayFilter™ EMC 545 demonstrated an average sediment removal efficiency of 83% over the course of 70 test runs.

Sediment Mass Loading Capacity

In order to maintain consistency during testing, sediment mass loading was maintained at 2044 grams (4.5 lb) per run. Removal efficiencies were above 80% and driving head was stable before the sediment load reached 300 lb. Flow rates through the filter, similarly, remained fairly constant until the sediment load reached approximately 275 lb, at which point a gradual decrease became apparent. After run 70, the average flow rate through the filter started dropping into the range of 90% of the target flow rate, and as a result, testing was concluded. The total sediment mass load captured for the 70 runs was 262 lbs.

Scour Testing

The BayFilter™ is designed for off-line installation. Consequently, scour testing is not required.

Sincerely,

Richard S. Magee, Sc.D., P.E., BCEE

8. References

ASTM D422-63. *Standard Test Method for Particle-Size Analysis of Soils.*

ASTM D3977-97. *Standard Test Methods for Determining Concentrations in Water Samples*.

BaySaver Technologies, LLC 2015. *Quality Assurance Project Plan for BayFilter EMC NJDEP Testing.* Prepared by BaySaver Technologies. September, 2015.

BaySaver Technologies, LLC 2016. *NJCAT Technology Verification: BayFilter™*. Prepared by BaySaver Technologies. May 2016.

NJDEP 2013a. *New Jersey Department of Environmental Protection Procedure for Obtaining Verification of a Stormwater Manufactured Treatment Device from New Jersey Corporation for Advanced Technology*. Trenton, NJ. January 25, 2013.

NJDEP 2013b. *New Jersey Department of Environmental Protection Laboratory Protocol to Assess Total Suspended Solids Removal by a Filtration Manufactured Treatment Device.* Trenton, NJ. January 25, 2013.

VERIFICATION APPENDIX

Introduction

- Manufacturer – BaySaver Technologies, LLC, 1030 Deer Hollow Drive, Mt. Airy, MD 21771. Website: http://www.BaySaver.com Phone: 800-229-7283.
- MTD - BayFilter™ EMC verified models are shown in **Table A-2**.
- TSS Removal Rate – 80%
- Off-line installation

Detailed Specification

- NJDEP sizing tables and physical dimensions of BayFilter™ EMC 545 and 545LP verified models are attached (**Table A-1** and **Table A-2**). These Sizing Tables are valid for NJ following NJDEP Water Quality Design Storm Event of 1.25" in 2 hours (NJAC 7:8-5.5(a)).
- Maximum inflow drainage area
    - The maximum inflow drainage area is governed by the maximum treatment flow rate of each model as presented in **Table A-2**.
- Driving head will vary for a given BayFilter™ model based on the site specific configuration. There is no maximum head, but the minimum head varies based on the height of the cartridge (minimum heads are 30”, 28”, and 18”). Design support is given by BaySaver for each project, and site-specific drawings (cut sheets) will be provided that show pipe inverts, finish surface elevation, and peak treatment and maximum flow rates through the filter unit. For the tested unit, the driving head was 36 inches.
- The drain down flow is regulated by a drain down orifice, sized so that a clean filter drains down in approximately 5 minutes. The drain down flow rate is expected to decrease as the filters ripen.
- See BaySaver Technologies BayFilter™ Design Manual Section VIII Inspection and Maintenance (page 20) for inspection and maintenance procedures. http://www.ads-pipe.com/pdf/en/AD580614BayFilterDesignManual.pdf
- This certification does not extend to the enhanced removal rates under NJAC 7:8-5.5 through the addition of settling chambers (such as hydrodynamic separators) or media filtration practices (such as a sand filter).

Table A-1 BayFilter™ 545 and 545LP EMC Design Parameters

Configuration	Number of Cartridges	Effective Sedimentation Area (sq. ft.)	Effective Filtration Treatment Area[1] (sq. ft.)		50% Maximum Sediment Storage Volume[2] (cu. ft.)	
			BayFilter™ 545	BayFilter™ 545LP	BayFilter™ 545	BayFilter™ 545LP
4’ manhole	1	12.57	90	45	2.75	1.47
4’ by 6’ vault	2	24	180	90	5.21	2.80
5’ manhole	3	19.63	270	135	3.73	2.16
6’ manhole	4	28.27	360	180	5.50	3.14
6’ by 6’ vault	4	36	360	180	7.43	4.11
7’ manhole	5	38.48	450	225	7.66	4.32
8’ manhole	7	50.27	630	315	9.82	5.60
8’ by 10’ vault	10	80	900	450	16.07	9.02
8’ by 12’ vault	13	96	1170	585	18.89	10.72
8’ by 14’ vault	15	112	1350	675	22.11	12.53
8’ by 16’ vault	18	128	1620	810	24.93	14.23
10’ by 16’ vault	21	160	1890	945	31.75	17.94
10’ by 20’ vault	27	200	2430	1215	39.40	22.35

1. Based on 90 sq. ft. per 545 cartridge and 45 sq. ft. per 545LP cartridge.
2. Based on 3” sediment depth for configurations with 545 cartridges and 1.5” sediment depth with 545LP cartridges.

Table A-2 MTFRs and Maximum Allowable Drainage Area for BayFilter™ 545 and 545LP EMCs

Configuration	BayFilter™ 545 EMC			BayFilter™ 545LP EMC		
	MTFR[1] (gpm)	Sediment Capture Capacity[2] (lb)	Maximum Allowable Drainage Area[3] (Acres)	MTFR[1] (gpm)	Sediment Capture Capacity[2] (lb)	Maximum Allowable Drainage Area[3] (Acres)
4’ manhole	45	262	0.44	22.5	131	0.22
4’ by 6’ vault	90	524	0.87	45	262	0.44
5’ manhole	135	786	1.31	67.5	393	0.66
6’ manhole	180	1048	1.75	90	524	0.87
6’ by 6’ vault	180	1048	1.75	90	524	0.87
7’ manhole	225	1310	2.18	112.5	655	1.09
8’ manhole	315	1834	3.06	157.5	917	1.53
8’ by 10’ vault	450	2620	4.37	225	1310	2.18
8’ by 12’ vault	585	3406	5.68	292.5	1703	2.84
8’ by 14’ vault	675	3930	6.55	337.5	1965	3.28
8’ by 16’ vault	810	4716	7.86	405	2358	3.93
10’ by 16’ vault	945	5502	9.17	472.5	2751	4.59
10’ by 20’ vault	1215	7074	11.79	607.5	3537	5.90

1. Based on 0.5 gpm/sq. ft. of effective filtration treatment area.
2. Based on performance test 262 lb/cartridge for the 545 EMC and estimated 131 lb/cartridge for the 545LP EMC.
3. Based on the equation in the NJDEP Filter Protocol: Maximum Inflow Drainage Area (acres) = Weight of TSS before 10% loss in MTFR (lbs)/600 lbs per acre of drainage area annually.